PACLOCK

THE FUTURE OF PADLOCKS™

2021 Product Catalog

A Letter From PAC-PREZ

Fifteen years ago, I told our family that we have an opportunity to turn our padlock manufacturing company into the new "American Lock." I told them that it would take a lot of changes, and likely a lot of mistakes as well as time for us to earn that title, "America's Lock." Without question, the Junkuncs built not only a great brand, but a great product supporting that great brand. And they earned the title of "America's Lock." But today, in 2020, that title of America's Lock has been stripped from the Junkunc's brand and it is up for grabs.

I believe PACLOCK will earn the title of America's Lock. Maybe not this year, maybe not even next year, but it will happen, I guarantee it. Much of the '10 decade was all about building PACLOCK's USA based manufacturing capabilities. We focused on building solid foundations in our quality processes, our internal sales management systems, and our CNC machining capabilities. While we still have some work to do, we're close.

And I believe the fruits of our labors are apparent. PACLOCK has the best range of solid-body padlocks and, more importantly, we are heads and shoulders above the competition with our quality and customer service. In 2019 we became the first company ever to introduce a full line of Buy America Act compliant padlocks sold in a retail environment at The Home Depot. Not only that, but those products are sold at a premium as compared to the "other" padlocks, and our products are moving off the shelves.

PACLOCK's concept of "Every Lock, One Key" is paramount to our success. Whether it's the end users being able to manage and control their own padlock systems, or it's locksmiths depending on our commercial cylinder capable padlocks, PACLOCK is all about one key opening all of your physical security devices. Our "Universal Cylinder System," or "UCS," is the heart of our success in the retail environment.

When you couple a user's ability to have one key to open all of their padlocks with the largest variety of solid-body, high security padlocks, what you get is an empowered user. The '10 decade saw PACLOCK begin producing padlocks for every commercial cylinder that we could get our hands on. The '20 decade will see PACLOCK focused more on specific industries like camping, transportation, and safety lock out.

Moreover, the '20s will be an era of excitement at PACLOCK as we jump with both feet into developing and selling the first Buy American Act compliant disc detainer cylinder system. Gone will be the days of depending on our European friends to produce "high security" for America. PACLOCK will be taking the fight into the institutional and critical infrastructure markets. PACLOCK will be going after military contracts where European manufacturers have had monopolies. PACLOCK will become the greatest padlock manufacturer there has ever been as we build products that the Junkuncs never did.

PACLOCK will become the new lock for America and the world.

Gregory B. Waugh
President & CEO
gwaugh@paclock.com
661.294.3707 ext. 101

Follow @PACLOCK_PREZ on Instagram and Twitter! You can find exclusive PACLOCK videos on our YouTube Channel!

Why PACLOCK?

Catalog Overview

Introduction
Patents and Awards 5

Locks By Industry
Commercial/Institutional 6
Construction/Jobsite 8
Transportation/RV 10

Available Options
Body Materials 12
Shackles/Colors 13
Keying Options 14
Cylinder Options 15

Featured Solutions
Universal Cylinder System (UCS) 16
Safety Lockout (LOTO) 18
Your Logo, Your Locks™ 20

Locks By Type
1/4" Dia. Shackle Padlocks 22
5/16" Dia. Shackle Padlocks 24
3/8" Dia. Shackle Padlocks 26
7/16" Dia. Shackle Padlocks 28
RVs & Trailers 30
Shipping & Hauling 36
Shutter Locks 40
Cone-Shaped Pucks 42
Flat Back Pucks 44
Stepped Back Pucks 46
Hasps 48
Chains & Puck-Link 50
PAC-KEEPER™ Key Control 52
Disc Padlock Pro 54
Single-Post Padlock 55
Government Locks 56
Option Groups 60

Every Lock, One Key™

1

PACLOCK offers the simplest way to minimize the size of your key ring and unlock the full potential of your lock system through our "Every Lock, One Key" mentality. PACLOCK is the only manufacturer providing you the ability to key any lock style together across a broad range of cylinder designs. If you're not already using a commercial cylinder system, PACLOCK's own UCS cylinders can be swapped in minutes and allow your padlock system to be master or grand-master-keyed.

The American Difference

2

At PACLOCK we engineer, CNC machine, assemble, and quality test the majority of our product line in the USA – one of our key differentiating factors. PACLOCK is the only manufacturer in the world producing Buy American Act (BAA) and Trade Agreement Act (TAA) compliant brass, stainless steel, hardened steel, and aluminum body padlocks. Because we manufacture in the USA, most orders ship within 2-5 business days – whereas the competition takes months to deliver.

The Future of Padlocks

3

While the same shovel can be used to dig a trench, dig a hole, or shovel snow, it doesn't mean that you should. So why use the same style of padlock for everything? PACLOCK's dedication to engineering innovation means quickly developing new padlock designs built specifically for each unique application. Containers, trailer doors, job boxes, and roll-up doors are only a few of the designs PACLOCK has developed for high security solutions all using the same key.

"How Do I Buy PACLOCKs?"

Contact your local locksmith or call PACLOCK direct! You can also find PACLOCK products in stores at your nearest Universal Cylinder System (UCS) retailer.

Patented & Patent-Pending Products

Hidden-Shackle Sleeve For Commercial Cylinders

US Patent 8,776,557 (2014) & US Patent 8,978,426 (2015)

The PAC-SLEEVE™ allows PACLOCK to put almost any cylinder into any of our hidden-shackle padlocks.

Puck-Link™

US Patent 10,047,547 (2018)

The mountable Puck-Link™ chain locking system is the most innovative lock in chain security. Our patented "Pop-Top" operation and chain retention hook leave no shackle to cut and make it effortless to lock and unlock.

Roll-Up Door Lock

US Patent 10,107,008 (2018)

The only one-piece high security solution that protects and defends the most critical point of your roll up truck door's latching system ~ the hook. When locked, the orientation of the key positioning makes picking or drilling the cylinder virtually impossible. We offer a version for both Todco and Whiting door handles.

PB-Cargo Lock

US Patent 10,619,382 (2020)

"Keyless Locking System" PACLOCK's Bluetooth (PAC-BLU™) Cargo Locking System will be a direct replacement for roll-up truck doors.

Trailer/Container Locks

US Patent 10,745,936 (2020)

Both the TL81A and TL82A were five years in development ~ considerable time was spent creating the necessary reliefs and holes to allow the TL series to have a well-adjusted fit for your trailer. The design of the TL series prevents any type of bolt cutter attack.

Cone-Shaped Design

Patent-Pending

The cone-shaped puck resists frontal drilling attacks. When placed in a recessed housing, the attacker is forced to use longer length drill bits that cannot get a bite onto the slope.

Award-Winning

LOCKHEED MARTIN

Lockheed Martin® 2014 Supplier of the Year

In 2009, PACLOCK earned Lockheed Martin's trust as their primary sub-contractor in supplying padlocks for the Fleet Automotive Support Initiative (FASI) program. By 2017, PACLOCK produced and delivered 5 million padlocks with not one return for quality problems. PACLOCK delivered directly from our factory to the warfighter on more than a hundred and four-thousand orders all with a one to three-day turn-around time!

2020 WorldStar™ Marketing Award - Bronze Winner for Bi-Fold Clamshells

PACLOCK teamed up with PLACON® and Pratt Industries to create packaging for our UCS product line sold in stores. This unique clamshell packaging provides the consumer an ability to touch the product without the risk of theft prior to purchase. This design also provides 200% more marketing space over regular clamshells by opening the back panel revealing further product information.

Institutional Security

Security Solutions to Meet Facility Management Demands

Commercial Cylinder Locks

UCS IC A COR M SGT Y6 Y7 KiK FSIC

The Most Diverse Solid Body Lineup

PACLOCK's "Every Lock, One Key" mentality created the most diverse solid-body lineup of padlocks that accept a tremendous range of commercial cylinders. No other padlock manufacturer has as full of a line of purpose-built padlocks accepting commercial cylinders. Secure everything on your site or at your facility—including job boxes, trailer doors, trailer hitches, gates, and containers—with your SFIC, LFIC, FSIC, or KiK cylinders. Expand the security of your system by leveraging specific PACLOCKs for every application, and then customize each padlock to your needs. With PACLOCK's YLYL program, make your institution the "manufacturer" with YOUR logo stamped right on your locks.

Key-in-Knob / Key-in-Lever (KiK)

- PACLOCK has the ONLY "KiK"-compatible padlocks that do not arrive in pieces
- The best "KiK" padlock design in the world, all the "guts" stay secure in the padlock. Place the barrel plug on the bible and secure the cylinder with a screw. You'll never worry about loose drivers again!
- PACLOCK's patented PAC-SLEEVE™ creates the ability for "KiK" cylinders to compatible in any hidden-shackle PACLOCK
- Same padlock for "Screw-On Cap" and "Slotted" cylinder types – each version comes installed with the correct driver!

KiK Series

SFIC Series

Small Format Interchangeable Core

- The largest variety of SFIC-compatible padlocks – including hidden-shackle "hockey pucks"
- PACLOCK's SFIC solid-body padlocks accept major 5, 6, or 7-pin SFIC cores without using adapters
- Unique padlock design that retains the SFIC drivers and plates inside the padlock with a screw allows for immediate cylinder loading without having to reassemble the padlock
- Precision CNC machined insures a highly functional and long-lasting padlock for your critical areas

Large Format Interchangeable Core

- 6 and 7-pin compatible
- ¼" shackled padlocks compatible with LFIC cylinders
- Patented PAC-SLEEVE™ for hockey-puck-style and hidden-shackle padlocks – unique to PACLOCK
- Need a LFIC padlock compatible with something other than an ASSA®, Corbin Russwin®, Sargent®, Medeco®, and Yale® cylinder? Just ask us, and we'll make it!

LFIC Series

Pac-Keeper
Pg. 52

The "Pac-Keeper" for Physical Key Control

- Manage your shared area keys by "trapping" the shared key, and then having users release the trapped key by inserting their own key
- User is forced to return the shared key in order to retrieve her key. Raised shoulders protect key heads from being destructively removed
- Optional cabinet allows the installation for up to ten Pac-Keepers
- Made in the USA from stainless steel, brass, and aluminum components

All product and company names are trademarks or registered trademarks of their respective holders. Use of the marks does not imply any affiliation with or endorsement by the holders.

Construction Security

Secure Your Jobsite with ONE KEY

Jobsite Security

"We've Got a Lock for That!"

Job sites depend on high levels of security in addition to the ability to easily manage those high levels of security. Keeping thieves away is important, but having the jobsite foreman with the right key at the right time is far more important. PACLOCK designed the Universal Cylinder System (UCS) with construction sites in mind. Get every lock on your site keyed into the same keyed-alike, master-keyed, or grand-master-keyed system for better key control and key convenience. Never let a job slow down because someone forgot the key to the job site container. Use that same key for your gates, job boxes, trailers, and more.

Worried about a key being compromised because you needed to let go of an employee? Simply swap out the cylinders in the locks on your site rather than replacing all of the padlocks themselves or risking that worker coming back to steal from you. Already using a commercial cylinder system? No problem. PACLOCK has all of the different padlock styles for any application for any cylinder system.

Job Box/ Gang Box Lock

- First lock designed to work with ANY job box from companies like Knaack® or Rigid®
- Shackle length engineered to ensure proper locking/unlocking
- Body width, thickness, and length form fitted for high security with less pry points

"10 Series"
Pg. 26

Hockey Puck and Hasp

- UCS-7A/810 puck and hasp kit is perfect for slide and swing van doors
- Never lose your lock again with our "Lock-to-Hasp™" fastening design
- The PL810 "Never-Rust" double-coated hasp is a direct replacement for competitors' hasps

Hasp & Puck
Pg. 48

"6 Series"
Pg. 50

Chain Locking System

- Works with any length of 3/8" chain
- Easy-to-use mounting plate and one-handed "Pop-Top" lock operation
- Simple mounting for your gate, van, trailer, or generator

"82 Series"
Pg. 36

Container Door Lock

- Designed for swinging-handle hasps on containers
- Prevents bolt-cutter attacks with its unique, hidden-shackle design
- Body made from 6061 aircraft-grade aluminum and precision machined in PACLOCK's USA manufacturing facility

Transportation Security

Security Solutions for RV's, Cargo Security, and Everyday Transport

Trailer & RV Locks

Every Lock, One Key™ Security

PACLOCK's Transportation Series features high-security, hidden-shackle padlocks optimized for swing-doors, roll-up doors, RV's and haulers, trailer latches and hitches. One of the big reasons PACLOCK's "TL" Series stands out is the fact that only PACLOCK can create and manufacture lines of padlocks that have the ability to cross key throughout. The design of the "TL" Series prevents any type of bolt-cutter attack and with a 6061 aircraft-grade aluminum body – precision machined in PACLOCK's USA manufacturing facility – PACLOCK's "TL" padlocks are far superior to common shackled padlocks.

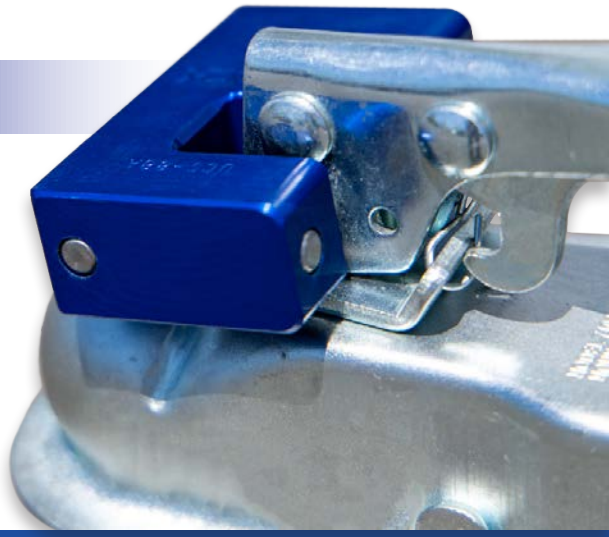

Trailer Door Padlock

- World's best padlock design for toy haulers, trailers, and swinging door latches
- Innovative hidden-shackle design removes the possibility of cutting the shackle
- Includes PAC-TETHER™ to keep padlock tethered on the door whenever it is unlocked

"81 Series"
Pg. 30

Locking Hitch Pin

- Built to handle any road trip, cross-country journey, or haul you take it on
- Manufactured with American 304 stainless steel for strength and weatherability
- Features our PAC-BAND™ silicone cover that keeps dirt and grime out of your cylinder

"80 Series"
Pg. 34-35

"88 Series"
Pg. 33

1150-SRV
Pg. 31

Super RV Lock

- Replaces outdoor storage compartment locks
- High-security cylinder keeps your belongings safe
- Compatible with UCS and Standard Rekeyable cylinders

Trailer Coupler Lock

- Hidden shackle design provides ultimate security
- Ability to key your hitch padlock with any other PACLOCK using PO keyway
- Guarded shackle to protect the padlock from bolt cutters and grinders

Body Materials

6061 Aircraft-Grade

Aluminum has quickly become PACLOCK's best-selling body material because of its weather resistance, light weight, and ability to stand up to grinders better than other materials. Laser engrave on one of ten standard colors making aluminum the most customizable body material in our lineup.

360 Brass Alloy

PACLOCK's solid-body brass padlocks provide great weather resistance in high-corrosion environments along with a heavy weight associated with higher security. PACLOCKs brass padlocks begin as raw 360-grade brass before being machined and finally sanded to a smooth, attractive finish. Many customers are moving to aluminum as the raw material costs for brass continue to increase.

304 Stainless Steel

PACLOCK's 304 stainless-steel padlocks are the ultimate physical-security solution for all-weather environments. Stainless steel provides the highest combination of drilling resistance, cutting resistance, and weatherability. PACLOCK uses 304-grade stainless steel which is harder to machine, but gives customers the best product on the market.

Case-Hardened Steel

PACLOCK's hardened-steel padlocks are case-hardened and electroless-nickel plated to provide strength against physical attacks and resistance against corrosive environments. Electroless-nickel plating allows the nickel to adhere to all surfaces of the padlock for full protection as opposed to the typical electrolytic-plating which can't get deep into the padlock inner surfaces.

USA-Made Safety Lockout

PACLOCK's thermoplastic padlock bodies are precision molded in the United States, setting PACLOCK apart as the only thermoplastic-padlock manufacturer making domestic parts. This gives PACLOCK the advantage when you need short lead times or custom colors. Our two-tone LOTO locks provide 36 unique color combinations to differentiate your departments or areas.

Shackle Material

Hardened Stainless Steel

Strength meets weatherability

Made of stainless steel that has been hardened and plated

Available in 1” and 2-1/2” heights

Hardened Steel

High cut resistance

Plated to protect against environmental corrosion like saltwater or rain

Available in ¾”, 1”, 1-½”, 2”, 2-½”, 3” and 5” heights

Stainless Steel

High corrosion resistance

Made from 316 stainless, the same material as most medical grade tools

Available in 1”, 2”, and 3” heights

Solid Brass

High weatherability

Used for brass military locks or in non-conductive areas

Available in 1” and 3” heights

Color Options

Call us about custom colors!

Anodized (10 Standard Colors)

Black, Blue, Brown, Gold, Green

Orange, Purple, Red, Silver, Yellow

Powder Coated (6 Standard Colors)

Black, Blue, Green

Orange, Red, Yellow

Keying Options

Keyed Different - Keyed Alike - Master Keyed - Grand Master Keyed

Keyed Different (KD)

Each padlock has its own unique key. This is the default keying for all standard rekeyable products unless requested otherwise.

Keyed Alike (KA)

All padlocks in the group can be opened with the same key, offering convenience and eliminating multiple keys for those who use numerous padlocks.

Master Keyed (MK)

Each padlock has a unique key that cannot be used to open the other padlocks, but there is a “master” key that can open all of the padlocks in the group.

Grand-Master Keyed (GMK)

This system uses two or more “master” key sub-groups where all the padlocks can be opened by a “grand-master” key. However, the sub-groups remain independent of each other.

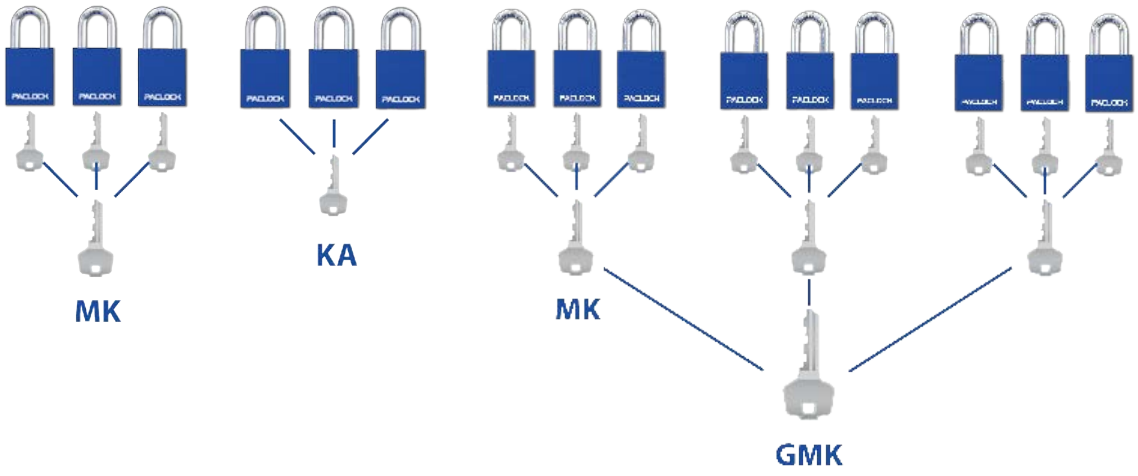

Keyway Profiles

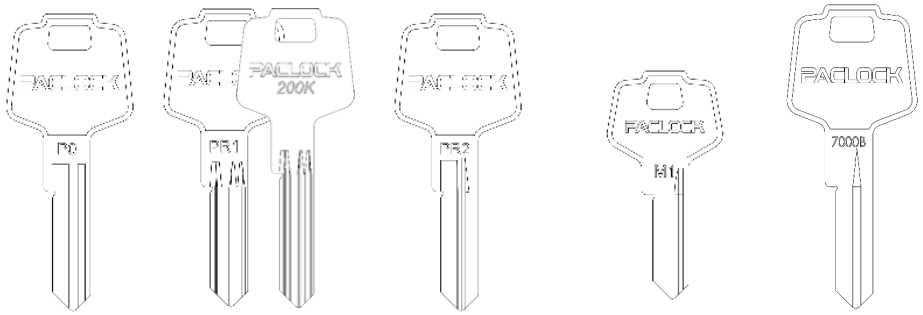

P0 | PR1/200K | PR2 | M1/M15 | 7000B

PACLOCK produces cylinders with a variety of keyways. The P0 keyway is our standard keyway that matches up with the American Lock® AM3 allowing customers to easily key into current systems. We also offer two restricted keyways with PR1 and PR2 along with several Master Lock® or American Lock® keyways. Custom keyways available!

AR1* | AR2* | AR7*

*Keys not included

Cylinder Compatibility

Whatever cylinder style you have, we have a padlock series for it.

PACLOCK
6-pin, high-security, pin tumbler cylinder with brass pins and 4,000 unique key combinations.

PACLOCK Pro
7-pin, high-security, key-retaining pin tumbler cylinder with 200,000 unique key combinations.

ASSA® LFIC
ASSA® LFIC compatible bodies for 6 or 7-pin Large Format Interchangeable Cylinders.

Medeco® LFIC
Medeco® LFIC compatible bodies for 6 or 7-pin Large Format Interchangeable Cylinders.

Yale® 6-Pin LFIC
Yale® LFIC compatible bodies for 6-pin Large Format Interchangeable Cylinder.

Key-in-Knob/Key-in-Lever
Key-in-Knob/Key-in-Lever compatible bodies with drivers for screw-on cap or slotted style cylinders.

Universal Cylinder System
Easy-to-change, high-security cylinder with stainless-steel security pins, 20,000 unique key combinations

5/6/7-Pin SFIC
SFIC compatible bodies for 5, 6 or 7-pin Small Format Interchangeable Cylinders.

Corbin Russwin® LFIC
Corbin Russwin® LFIC compatible bodies for 6 or 7-pin Large Format Interchangeable Cylinders.

Sargent® LFIC
Sargent® LFIC compatible bodies for 6 or 7-pin Large Format Interchangeable Cylinders.

Yale® 7-Pin LFIC
Yale® LFIC compatible bodies for 7-pin Large Format Interchangeable Cylinders.

Schlage® FSIC
Schlage® FSIC compatible bodies for 7-pin Full Size Interchangeable Cylinders.

All product and company names are trademarks or registered trademarks of their respective holders. Use of the marks does not imply any affiliation with or endorsement by the holders.

Universal Cylinder System

Better-Than-Locksmith-Grade Security

Every Lock, One Key™

The UCS system is the simplest way to minimize the size of your key ring and unlock the full potential of your lock system.

With UCS™, keying convenience and high security come together to produce the most innovative padlock system ever. Easy-change UCS™ cylinders can be removed and re-installed in less than a minute giving you the power to maximize your lockability – you can even build your own master-keyed or even grand-master-keyed system! Instead of replacing padlocks when your keys are compromised, just swap the cylinders to save the cost of buying a new lock! Best of all, you can easily re-pin your old cylinders to a new key number so you can re-use them the next time.

Never before has it been possible to key together padlocks built specifically for trailers, containers, job boxes, chains, and more. Every UCS™ padlock can be opened using the same key, which is possible because of PACLOCK's extreme-machining precision and innovative padlock designs.

Easy-Change Cylinders

With UCS, YOU become the locksmith. “Every Lock, One Key” allows you to easily expand your locking system and buy different-styled padlocks all keyed to the same number. Have an employee walk off with your key? No problem! UCS gives you the ability to immediately change keying or easily re-pin your padlocks in a matter of minutes.

High-Security Cylinders

The UCS high-security pick and bump-resistant, 6-pin cylinder with more than 20,000 unique key codes is unrivaled. Stainless-steel security pins resist drill attacks and create “false sets” making PACLOCKs virtually impossible to pick or drill. No lock provides a higher level of security. A lock with four pins is lucky to yield hundreds of key changes, meaning that it’s not uncommon that you share the same key with another owner of the same lock type. With 20,000 key codes – you’ll virtually never have the same key codes as your neighbor.

Locks For Every Scenario

Made in USA with global components

All UCS™ padlocks are precision-CNC machined, hand-assembled, finished, and tested in the USA – our key differentiating factor. Because we manufacture in the USA, we can control quality, production capacity, and quickly develop new, innovative products in a matter of weeks, not months or years.

Marine Grade Quality

Our UCS™ locks are marine grade from the inside out. Built with 6061 aircraft-grade aluminum or 304 stainless steel bodies, UCS™ locks are all-weather, rust-proof, and impervious to salt damage. UCS™ locks are machined from a solid block of material to provide maximum strength – delivering a lock built to last through the harshest environments.

Safety Lockout Tagout

Industry-Leading Safety Lockout Padlocks

PL410-PRO & 90A-PRO

"The new standard of GROWTH and EXPANSION in LOTO"

200,000+ Key Changes

When PACLOCK was approached by the LOTO safety industry to solve the problem of not enough key combinations for Lock-Out-Tag-Out padlocks, we had one condition: we do it our way. As a result, PACLOCK brought forth the new standard of growth and expansion in LOTO systems to the industry.

With over 200,000 possible key combinations, PACLOCK's "PL410-PRO" quintuples what customers expect today from a typical safety-lockout padlock. It's also the only product where small runs with custom keying and colors are available. Topping it all off, the "PL410-PRO" is the first and only thermoplastic padlock produced in the United States with some global components.

New 7-Pin Technology

- Our LOTO locks **offer over 200,000 key combinations** while only using 7 pins
- PACLOCK re-engineered the pin technology to surpass industry norms
- Increased the lastingness of the PL 410-PRO (any key with 8 pins or more is prone to breaking)
- PACLOCK'S PL 410-PRO can be keyed-alike, master-keyed, and even grand-master-keyed

Custom, reserved keyways can be manufactured for large LOTO operations

PACLOCK We Hire Veterans and Employees with Disabilities COMMITMENT

MADE IN USA
WITH GLOBAL COMPONENTS

The Only Padlock Manufacturer Producing Buy America Act Compliant LOTO

The first and only thermoplastic padlock manufactured in the U.S., the "PL 410-PRO" is PACLOCK's answer to its motto "The Future of Padlocks." PACLOCK is a family-run business, owned and operated in the U.S. Using global components, PACLOCK precisely manufactures Lock-Out-Tag-Out padlocks to help keep operations safe and up to OSHA standards.

Color and Shackle Options

- Available in 8 standard colors (36 total color combinations)
- 6 different available shackle lengths: 3/4", 1-3/16", 1-1/2", 2", 3", and 5"
- Shackles engineered specifically to ensure safe operations and meet required OSHA standards

8 Solid Color Options

5 Shackle Lengths

28 Two-Tone Colors

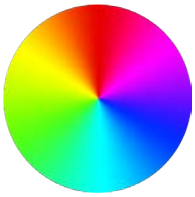

Tell us your favorite color!

More Custom Capabilities

- Need more than 36 color combinations? Custom colors are available
- Key-alike, master-key, or grand-master-key in small quantities with short lead times

Your Logo, Your Locks™

Finally A Brand You Can Sell With No Competition. YOUR BRAND.

Customers come for your expertise – make sure they keep coming back. Hard stamp your logo directly onto a PACLOCK, and make yourself a "manufacturer" of your own locks. Your company's branded locks and packaging keep your customers coming back exclusively to you, not a big box retailer or even Amazon. Your customers will forever remember your name as a provider of excellent US-Made security solutions.

Stop selling the same products as Amazon and other large retailers that spend millions on advertising. With YLYL, the locks you sell are "manufactured" by you. When you recommend them a lock, you'll be recommending YOUR locks. When customers come back, they'll be asking for YOUR locks. Don't just sell locks. Sell YOUR locks.

Being a part of YLYL means your company can put its logo on PACLOCK's hottest new releases.

Buy American Act Compliant

MADE IN USA
WITH GLOBAL COMPONENTS

Name Your Cylinder Type

PACLOCK's cylinder compatibility icons

3 Ways to Customize

Hard Die Stamping

Our 100-ton hydraulic press permanently hard stamps your logo into the solid lock body.

- Stand out as a manufacturer with your company logo stamped into your lock
- Custom locks – for life: if the stamp ever gets dull or damaged, we'll produce you a new one free of charge
- Offer your customers their logo stamped onto their locks

Laser Engraving

Our high-powered, precision laser permanently etches your logo or other info into the solid lock body.

- No Minimum Quantity
- No Set-Up Fee
- Custom Engrave just about anything onto the face, back, even sides of the lock
- Logos, Consecutive Serial Numbers, "Property Of...", etc.

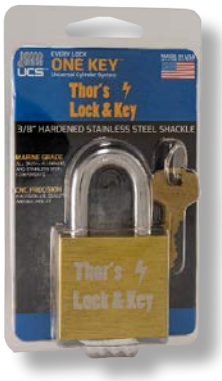

Custom Retail Packaging

Our marketing team will design custom packaging using your logo and color scheme.

- Display your branded locks in your own retail packaging
- Easy to open clam shells
- Can stand or be hung
- American flag prominently displayed on front
- Uniformly-sized packaging makes it easy to allocate shelf space

Stop Selling Padlocks. Start Selling Solutions.

Stop looking at a customer's need for a padlock as just a need for a padlock, and find a better way to solve the customer's problem. PACLOCK develops industry specific solutions to make it easier for you to sell a better crafted product to your customer. Job boxes, utility trailers, fences, or even areas where more than just one style of hasp is required to do the job are all examples of where PACLOCK excels.

Stamp Out the Competition.

If you sell to places like government agencies or educational institutions, then you can literally lock yourself in with them as a preferred supplier by putting THEIR logo or name on their padlocks! Have them add that to the quote specifications and truly lock out the competition. Because you can produce their locks for them in small batches, it becomes a win-win all around!

1/4" Diameter Shackle

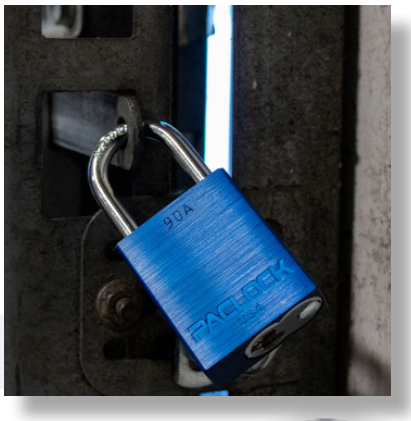

Light-Duty, All-Purpose Shackle

PACLOCK's ¼" shackled padlocks are a perfect low-security option for a multitude of general-purpose applications. Some of the most popular places to use ¼" PACLOCK's are gates, fences, lockers, and sheds. PACLOCK's "Every Lock, One Key" mantra allows all your locks to be opened using your unique key or to incorporate it into your own master-keyed or grand-master-keyed system. Our ¼" shackles range from ¾" to 5" tall, ensuring you'll have the perfect padlock for any application. For "Lock Out, Tag Out" applications, PACLOCK's "90A-PRO" and "PL410-PRO's" are undeniably the new standard of growth and expansion, offering 200,000 unique key combinations. See pg. 19 for LOTO details.

LFIC & FSIC Compatible - Only at PACLOCK

No other padlock manufacturer offers Large-Format-Interchangeable-Core and Full-Size-Interchangeable-Core-style padlocks with a ¼" diameter shackle. Without PACLOCK, it is impossible to keep every lock keyed into a LFIC or FSIC system especially when ¼" diameter shackled locks are necessary. Because of PACLOCK's commitment to offer greater varieties of solid-body padlocks than any other padlock manufacturer, you can keep everything locked up with your LFIC or FSIC cores.

The PACLOCK Way

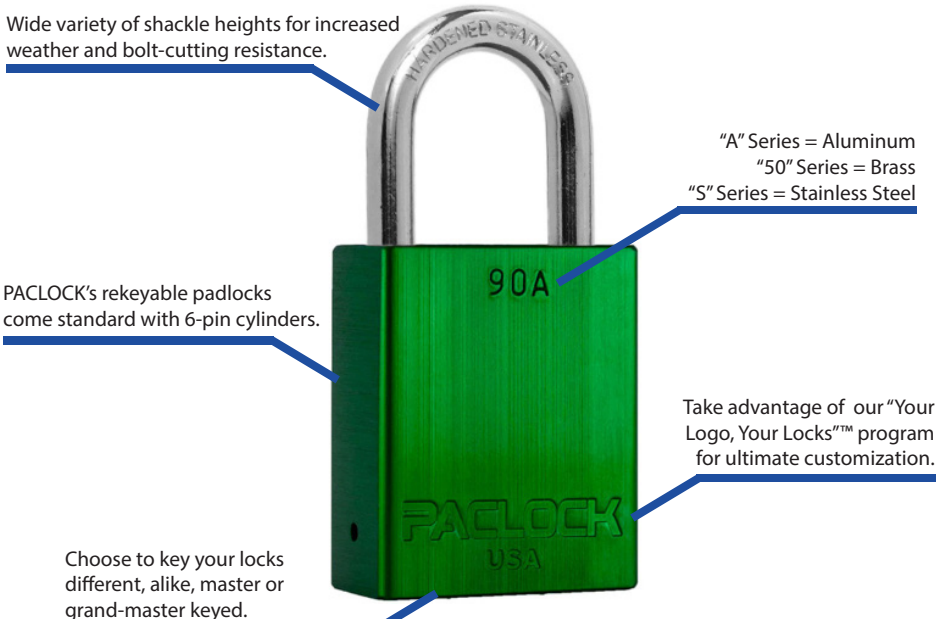

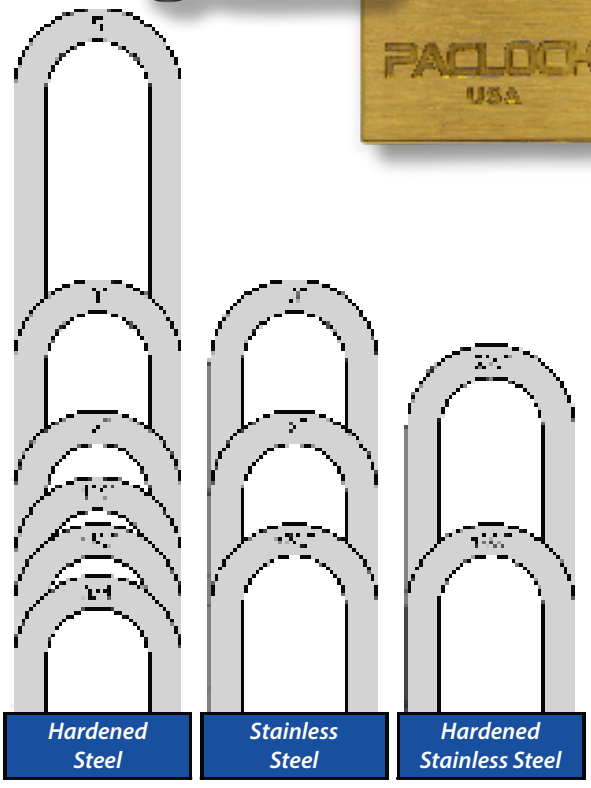

Series	Body	Width	Thick	Height	Options	PAC-BAND
UCS-1A	Aluminum	1-13/16"	7/8"	2"	1A - Pg. 60	•
90A	Aluminum	1-1/2"	3/4"	1-13/16"	1B - Pg. 60	
95	Brass	1-1/2"	3/4"	1-13/16"	1B - Pg. 60	
90A-PRO	Aluminum	1-1/2"	3/4"	1-7/8"	1C - Pg. 60	
PL410-PRO	Thermoplastic	1-1/2"	13/16"	1-13/16"	1C - Pg. 60	
90A-IC	Aluminum	1-1/2"	3/4"	2-1/4"	1D - Pg. 60	
95-IC	Brass	1-1/2"	3/4"	2-1/4"	1D - Pg. 60	
LFIC-ASA-1A	Aluminum	1-13/16"	7/8"	2-1/4"	1D - Pg. 60	•
LFIC-ASA-1B	Brass	1-13/16"	7/8"	2-1/4"	1D - Pg. 60	•
LFIC-COR-1A	Aluminum	1-13/16"	7/8"	2-1/4"	1D - Pg. 60	•
LFIC-COR-1B	Brass	1-13/16"	7/8"	2-1/4"	1D - Pg. 60	•
LFIC-M32-1A	Aluminum	1-13/16"	7/8"	2-1/4"	1D - Pg. 60	•
LFIC-M32-1B	Brass	1-13/16"	7/8"	2-1/4"	1D - Pg. 60	•
LFIC-SGT-1A	Aluminum	1-13/16"	7/8"	2-1/4"	1D - Pg. 60	•
LFIC-SGT-1B	Brass	1-13/16"	7/8"	2-1/4"	1D - Pg. 60	•
LFIC-Y6-1A	Aluminum	1-13/16"	7/8"	2-1/4"	1D - Pg. 60	•
LFIC-Y6-1B	Brass	1-13/16"	7/8"	2-1/4"	1D - Pg. 60	•
LFIC-Y7-1A	Aluminum	1-13/16"	7/8"	2-3/8"	1D - Pg. 60	•
LFIC-Y7-1B	Brass	1-13/16"	7/8"	2-3/8"	1D - Pg. 60	•
KiK-1A	Aluminum	1-13/16"	7/8"	2-1/4"	1D - Pg. 60	•
KiK-1B	Brass	1-13/16"	7/8"	2-1/4"	1D - Pg. 60	•
FSIC-1A	Aluminum	1-13/16"	7/8"	2-1/4"	1D - Pg. 60	•
FSIC-1B	Brass	1-13/16"	7/8"	2-1/4"	1D - Pg. 60	•

5/16" Diameter Shackle

Medium-Duty Security

PACLOCK's 5/16"-diameter shackled padlocks are a step up in security over their ¼" counterparts. The shackle is thick enough to repel most bolt cutter attacks, all the while being able to work in many applications. Commonly referred to as the "jack-of-all-trades" this shackle size is one of the most common shackled padlock sizes available. PACLOCK has sold millions of padlocks with this shackle diameter directly to the U.S. Military – safeguarding our warfighters equipment. If you are currently using a "#1" padlock, replace it with a PACLOCK and gain the keying convenience of PACLOCK's "Every Lock, One Key".

Most Versatile Padlock

PACLOCK's "100" and "-2" Series padlocks provide good security and can be used on almost any application. Because of the 5/16" shackle's low-profile and tough-to-cut profile, this shackle works perfectly to secure almost any general-purpose location effectively. Because all solid body PACLOCK's feature easy-change shackles, it's easy to get the right shackle for your application.

Shackle Quick-Change "How-To"

Switching out shackles is easy!

Step 1 Remove shackle retaining screw with 2.5 mm Allen wrench.

Step 2 Insert your locks key and rotate so the shackle opens. ***Hold shackle so it doesn't spring out!**

Step 3 Ensure ball bearings are still in place.

Step 4 Insert new shackle with key turned into open position. Once shackle is in place, rotate key to closed position.

Step 5 Re-insert shackle retaining screw and turn clockwise until snug.

Step 6 Insert key and open lock to ensure proper operation of the lock.

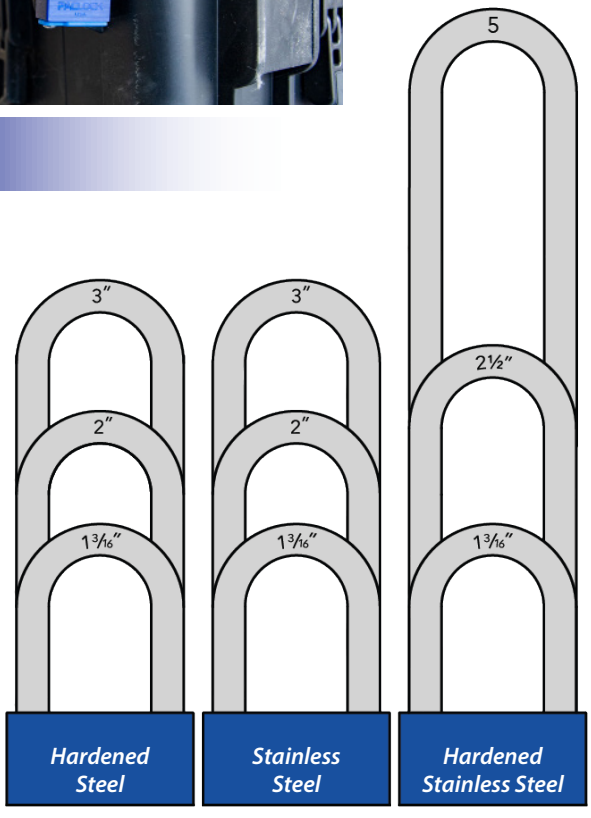

Series	Body	Width	Thick	Height	Options	PAC-BAND
UCS-2A	Aluminum	1-13/16"	7/8"	2"	2A - Pg. 61	•
100A	Aluminum	1-1/2"	3/4"	1-13/16"	2B - Pg. 61	
150	Brass	1-1/2"	3/4"	1-13/16"	2B - Pg. 61	
100A-IC	Aluminum	1-1/2"	3/4"	2-7/32"	2C - Pg. 61	
150-IC	Brass	1-1/2"	3/4"	2-7/32"	2C - Pg. 61	
LFIC-ASA-2A	Aluminum	1-13/16"	7/8"	2-1/4"	2C - Pg. 61	•
LFIC-ASA-2B	Brass	1-13/16"	7/8"	2-1/4"	2C - Pg. 61	•
LFIC-COR-2A	Aluminum	1-13/16"	7/8"	2-1/4"	2C - Pg. 61	•
LFIC-COR-2B	Brass	1-13/16"	7/8"	2-1/4"	2C - Pg. 61	•
LFIC-M32-2A	Aluminum	1-13/16"	7/8"	2-1/4"	2C - Pg. 61	•
LFIC-M32-2B	Brass	1-13/16"	7/8"	2-1/4"	2C - Pg. 61	•
LFIC-SGT-2A	Aluminum	1-13/16"	7/8"	2-1/4"	2C - Pg. 61	•
LFIC-SGT-2B	Brass	1-13/16"	7/8"	2-1/4"	2C - Pg. 61	•
LFIC-Y6-2A	Aluminum	1-13/16"	7/8"	2-1/4"	2C - Pg. 61	•
LFIC-Y6-2B	Brass	1-13/16"	7/8"	2-1/4"	2C - Pg. 61	•
LFIC-Y7-2A	Aluminum	1-13/16"	7/8"	2-3/8"	2C - Pg. 61	•
LFIC-Y7-2B	Brass	1-13/16"	7/8"	2-3/8"	2C - Pg. 61	•
KiK-2A	Aluminum	1-13/16"	7/8"	2-1/4"	2C - Pg. 61	•
KiK-2B	Brass	1-13/16"	7/8"	2-1/4"	2C - Pg. 61	•
FSIC-2A	Aluminum	1-13/16"	7/8"	2-1/4"	2C - Pg. 61	•
FSIC-2B	Brass	1-13/16"	7/8"	2-1/4"	2C - Pg. 61	•

3/8" Diameter Shackle

High-Security Shackle

If you need a padlock that's the strongest link in your chain or a thick shackle that you won't have a second thought about someone cutting off, PACLOCK's 3/8" shackles will fit the bill – and then some. Lock up your construction site, secure your boat, or make sure your generator doesn't run off with a "200" or "-2" Series padlock. With PACLOCK, all your locks can be opened using your unique key, keyed alike in groups with one master key, or even grandmaster

Purpose Built for Job Boxes

- The first padlock designed specifically for securing job boxes and tool chests
- Shackle length engineered to ensure proper locking and unlocking of the job box.
- Precision-machined in the USA
- Open using the same key as all your other PACLOCKs
- Stainless-steel, dual-ball-bearing design provides smooth, continuous operation of the padlock – no more slamming or hammering

Customer Testimonial

"Was looking for a very sturdy lock for the roll-up door on my van body and this definitely fit the bill. It can be re-keyed at will as well as changing the shackle if you would want. The CNC work is top-notch and the color is super bright. Will be buying my locks from PACLOCK only from now on. Buy American!"

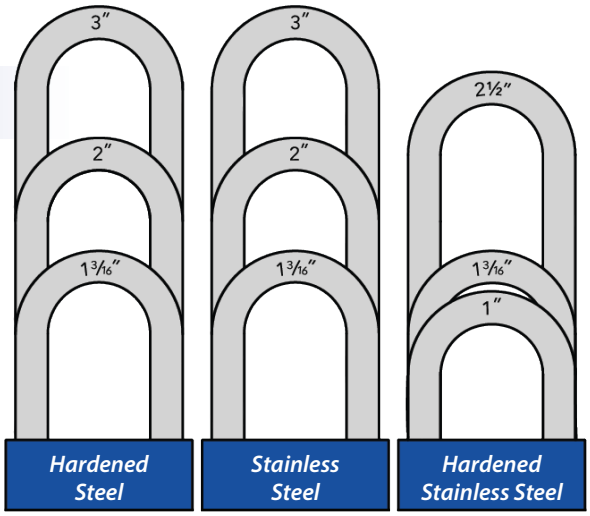

	Series	Body	Width	Thick	Height	Options	PAC-BAND
	UCS-3A	Aluminum	1-13/16"	7/8"	2"	3A - Pg. 62	•
	UCS-10A	Aluminum	1-13/16"	7/8"	2"	3A- Pg.62	•
	200A	Aluminum	1-1/2"	3/4"	1-13/16"	3B - Pg. 62	
	250	Brass	1-1/2"	3/4"	1-13/16"	3B - Pg. 62	
	200A-IC	Aluminum	1-1/2"	3/4"	2-7/32"	3C - Pg. 62	
	250-IC	Brass	1-1/2"	3/4"	2-7/32"	3C - Pg. 62	
	LFIC-ASA-3A	Aluminum	1-13/16"	7/8"	2-1/4"	3C - Pg. 62	•
	LFIC-ASA-3B	Brass	1-13/16"	7/8"	2-1/4"	3C - Pg. 62	•
	LFIC-COR-3A	Aluminum	1-13/16"	7/8"	2-1/4"	3C - Pg. 62	•
	LFIC-COR-3B	Brass	1-13/16"	7/8"	2-1/4"	3C - Pg. 62	•
	LFIC-M32-3A	Aluminum	1-13/16"	7/8"	2-1/4"	3C - Pg. 62	•
	LFIC-M32-3B	Brass	1-13/16"	7/8"	2-1/4"	3C - Pg. 62	•
	LFIC-SGT-3A	Aluminum	1-13/16"	7/8"	2-1/4"	3C - Pg. 62	•
	LFIC-SGT-3B	Brass	1-13/16"	7/8"	2-1/4"	3C - Pg. 62	•
	LFIC-Y6-3A	Aluminum	1-13/16"	7/8"	2-1/4"	3C - Pg. 62	•
	LFIC-Y6-3B	Brass	1-13/16"	7/8"	2-1/4"	3C - Pg. 62	•
	LFIC-Y7-3A	Aluminum	1-13/16"	7/8"	2-3/8"	3C - Pg. 62	•
	LFIC-Y7-3B	Brass	1-13/16"	7/8"	2-3/8"	3C - Pg. 62	•
	KiK-3A	Aluminum	1-13/16"	7/8"	2-1/4"	3C - Pg. 62	•
	KiK-3B	Brass	1-13/16"	7/8"	2-1/4"	3C - Pg. 62	•
	FSIC-3A	Aluminum	1-13/16"	7/8"	2-1/4"	3C - Pg. 62	•
	FSIC-3B	Brass	1-13/16"	7/8"	2-1/4"	3C - Pg. 62	•

7/16" Diameter Shackle

Ultra Heavy-Duty Security Shackle

When used to secure chain, PACLOCK's 7/16" shackled padlocks become the strongest link in the chain. Using a hidden-shackle design would eliminate the possibility of a bolt-cutter attack, but on applications where a hidden-shackle design doesn't work, the nearly 1/2" diameter shackle gets the job done. PACLOCK's "600/UCS-4" Series of padlocks are compatible with 11 cylinder types and are quite frankly overkill. For ultimate security, choose PACLOCK's UCS-4S – a 304 stainless-steel body featuring the UCS™ cylinder that has 20,000 unique key combinations and stainless-steel pins.

Cylinder Protection - The PAC-BAND™

- Field replaceable silicone cover
- Keeps dirt, grime, and other damaging elements out of the cylinder
- Offered across virtually all PACLOCK product series
- Tapped holes keep cover in locked in place

Retiring an Outdated Design

PACLOCK's "600/UCS-4" Series replaces the outdated "700" Series 7/16" diameter shackle padlock design with a rectangular design instead of a round one. Why was the original design round? No one really knows. PACLOCK's new design allows for the PAC-BAND™ to be outfitted onto every 7/16" PACLOCK and adds more material to the already beefy padlock body.

900 Series

600 Series

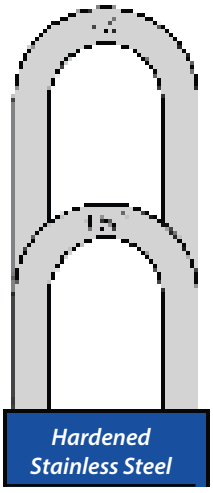

Shackle Highlight

7/16" Diameter Hardened Stainless Steel Shackle

PACLOCK's 7/16" diameter hardened stainless steel shackle is the best in class by far. Introduced in 2019, PACLOCK manufactured a stainless-steel shackle, hardened it and then nickel-plated it to give customers the best of both worlds – exceedingly high cut resistance and high rust resistance.

	Series	Body	Height	Options	PAC-BAND
UCS	UCS-4A	Aluminum	2-1/4"	4A - Pg. 63	•
P	600A	Aluminum	2"	4B - Pg. 63	•
IC	600A-IC	Aluminum	2-1/4"	4C - Pg. 63	•
A	LFIC-ASA-4A	Aluminum	2-1/4"	4C - Pg. 63	•
COR	LFIC-COR-4A	Aluminum	2-1/4"	4C - Pg. 63	•
M32	LFIC-M32-4A	Aluminum	2-1/4"	4C - Pg. 63	•
SGT	LFIC-SGT-4A	Aluminum	2-1/4"	4C - Pg. 63	•
Y6	LFIC-Y6-4A	Aluminum	2-1/4"	4C - Pg. 63	•
Y7	LFIC-Y7-4A	Aluminum	2-1/2"	4C - Pg. 63	•
KiK	KiK-4A	Aluminum	2-1/4"	4C - Pg. 63	•
FSIC	FSIC-4A	Aluminum	2-1/4"	4C - Pg. 63	•

Trailer Door Lock

U.S. Patent 10,745,936

The BEST Lock for Trailer Doors

- Form-fitting design for swing-trailer door handles
- Open all your trailer locks with the same key
- Bolt cutter proof, hidden-shackle technology
- Unique PAC-TETHER™ keeps the lock attached via cable to your trailer

No Shackle to Cut!

PACLOCK's patented, hidden-shackle design makes the "81" Series the best padlock design for your swing-door truck trailers, reefer trailers, toy haulers, car trailers, horse trailers, and equipment trailers. After years of testing, PACLOCK introduced the trailer door padlock – a high security solution for trailer doors – that fits consistently, unlike hockey-puck-style designs.

The form-fitting, 6061 aircraft-grade aluminum body leaves no shackle to cut and renders the "81" Series impervious to bolt cutters and hacksaws. Beyond increased security, the "81" Series of padlocks feature the PAC-TETHER™ – a cable that can be crimped to keep the lock fastened to your trailer door – so you'll never leave it behind.

	Series	Body	Options	PAC BAND
UCS	UCS-81A	Aluminum	5A - Pg. 64	•
P	TL81A	Aluminum	5B - Pg. 64	•
IC	TL81A-IC	Aluminum	5C - Pg. 64	•
A	LFIC-ASA-TL81A	Aluminum	5C - Pg. 64	•
COR	LFIC-COR-TL81A	Aluminum	5C - Pg. 64	•
M32	LFIC-M32-TL81A	Aluminum	5C - Pg. 64	•
SGT	LFIC-SGT-TL81A	Aluminum	5C - Pg. 64	•
Y6	LFIC-Y6-TL81A	Aluminum	5C - Pg. 64	•
Y7	LFIC-Y7-TL81A	Aluminum	5C - Pg. 64	•
KiK	KiK-TL81A	Aluminum	5C - Pg. 64	•
FSIC	FSIC-TL81A	Aluminum	5C - Pg. 64	•

Super RV Lock

"Key your RV locks with your other PACLOCKs!"

High Security RV Storage Lock

Almost every motorhome, camper, or RV comes with the same storage compartment keys. If you own an RV or a camper, try unlocking your friend's camper with your key. There's a good chance your friend's lock uses the same key. If you've ever taken your RV to the shop for maintenance, the shop probably didn't ask for your keys because the shop – and lots of other people – already have the keys to your RV. You might as well never lock your compartments when sharing the same key as everyone else.

PACLOCK's "Super RV Lock" brings real key control to your outdoor storage compartments. Whether you choose the UCS™ or Standard Rekeyable version, you've stepped up to a system allowing for more than 20,000 or 4,000 key combinations, respectfully. Machined from 6061 aircraft-grade aluminum, the "SRV-1150" is rust resistant and features a silicone cover – the PAC-BAND™ – that protects the internal components from road grime.

Every Lock, One Key™

- Replace any outdoor storage compartment lock with the "SRV-1150" – just drill a 1" hole and install
- Key into your existing UCS™ or Standard Rekeyable systems
- Upgraded cam resists prying attacks – keeping your cargo secured

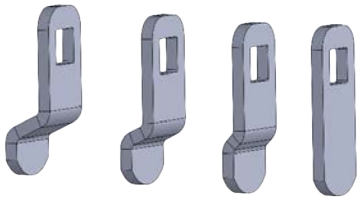

4 cams included so you get the perfect fit!

	Series	Body	Options	PAC BAND
UCS	UCS-1150SRV	Aluminum	5A - Pg. 64	•
P	SRV-1150	Aluminum	5B - Pg. 64	•

Universal Coupler Lock

"High-performance universal coupler lock fits essentially every coupler size out there!"

"79 Series" Coupler Lock

From the success of the "88 Series", the shrouded coupler lock, PACLOCK found a few ways to broaden universality with the "79 Series". PACLOCK's universal coupler lock is built to secure boat trailers, kayak trailers, moving trailers, and more. The "79" uses a stainless-steel pin that locks coupler latches up to 3" wide. Another adjustment made was with the distance between the base of the coupler and the lock body. With the pin diameter being 1/4" it has more clearance to be closer to the coupler base. With the unique locking grooves and adjustability, the "79" becomes the best option to secure what's important.

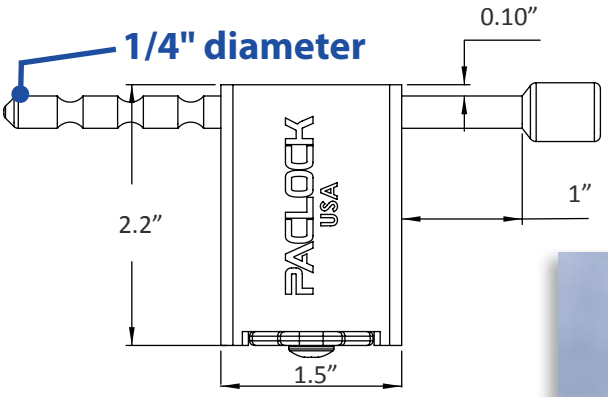

Features

- 1/4" diameter pin with 6 adjustable locking grooves
- Aluminum body makes this lock resistant to rust and corrosion
- PAC-BAND™ removable cover for cylinder protection

Additional Uses

- Ice chests
- Cargo cases
- Flag poles
- Horse trailers
- Teardrop trailers
- Bike racks
- Camping trailers
- Storage trailers

Cylinder Options

Call for more cylinder options!

	Series	Body	Options	PAC-BAND
UCS	UCS-79A	Aluminum	5A - Pg. 64	•
P	TL79A	Aluminum	5A - Pg. 64	•

Shrouded Coupler Lock

"U-Shaped design virtually eliminates bolt cutter attacks!"

High Security Coupler Padlock

- Fits 0.90" wide trailer latches on utility trailers, RV's, flatbed trailers, and more
- "U-shaped" design prevents bolt cutter attacks
- Thin-shackle design specifically engineered to fit trailer couplers
- The only coupler lock on the market with the ability to key other trailer locks into it and order more locks keyed to the same key
- 2 anti-saw, stainless-steel pins are machine pressed into the padlock in order to stop sawing and grinding attacks

Innovative Hidden Shackle Design

PACLOCK's high-security trailer coupler lock – the "88" Series – has every feature you could ask for in a padlock. The unique "U-shaped", hidden-shackle design essentially makes the "88" bolt-cutter proof by minimizing the amount of exposed shackle. In addition, two stainless-steel pins are machined-pressed into the 6061 aircraft-grade aluminum body to deter any type of sawing or grinding attack.

Not only can the "88" accept the same key as other PACLOCKs, but it also has a few quality-of-life features to increase the lifespan of the lock and make day-to-day use easy. The PAC-BAND™ weather cover – the light blue cover shown below – protects the cylinder from dirt, rain, and debris and the PAC-TETHER™ gives you the ability to securely fasten the lock to your coupler so you'll never leave it behind.

2 stainless-steel, *Anti-Saw* pins protect the lock from grinding attacks!

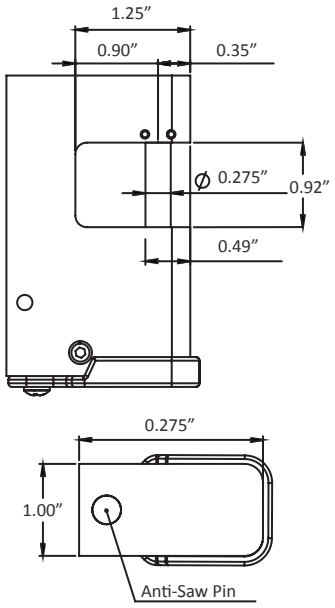

PAC-TETHER™ Securely fasten the lock to the coupler, and never lose it when its unlocked

Cylinder Options

Call for more cylinder options!

	Series	Body	Options	PAC-BAND
UCS	UCS-88A	Aluminum	5A - Pg. 64	•
P	TL88A	Aluminum	5A - Pg. 64	•

High-Performance Locking Hitch Pin

"Toughest, most rust-resistant, locking hitch pin in the world!"

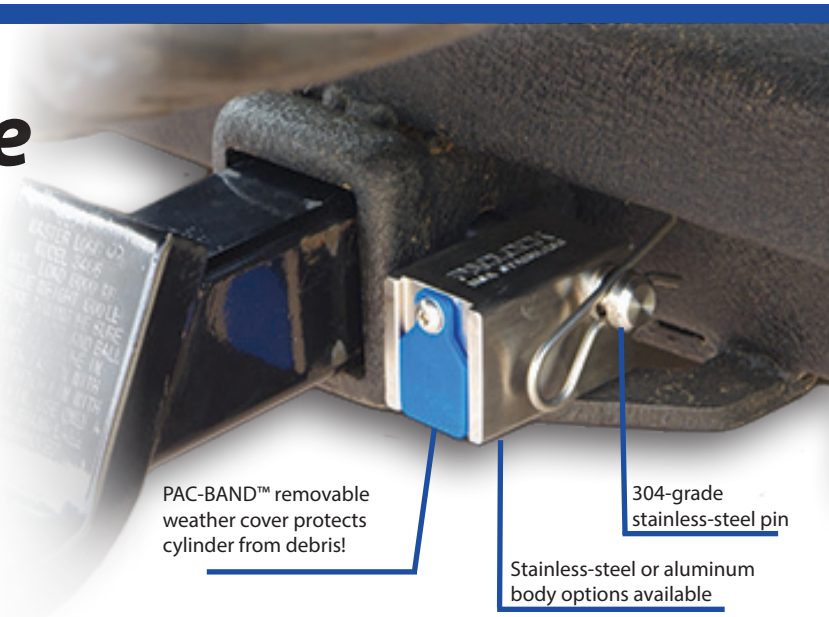

"80 Series" Features

- 304-grade, stainless-steel pin, and stainless-steel body make this combination more resilient than anything else!
- A stainless-steel pin to fit every receiver out there!
- Use one lock body with any of the four interchangeable stainless-steel pins
- 6061 aircraft-grade aluminum lock body available at a lower price and works with all stainless-steel locking pins
- Tie the keying of our "80 Series" locks into any other PACLOCKs

"80-250" Series

Fits 2", 2-1/2", and 3" Receivers

- 5/8" diameter pin designed for 2", 2-1/2", and 3" hitch receivers
- With the widest range the "80-250" works with most receivers!
- Fits Toyota Tundra, Ford F-150/250, GMC/Chevy 2500/3500, Dodge trucks, and many other vehicles with hitch receivers

"80-400" Series

Fits 4" Receivers

- 5/8" diameter pin designed for 4" hitch receivers
- The extended length works for drop-down hitches
- Secure chain with the pin when not towing

All trademarks, service marks and company names are the property of their respective owners.

"80-YK-1" Series

For Threaded Bike Racks

- 1/2" diameter pin works with Yakima® bike racks
- Compatible Yakima® models: FourTimer, FullSwing, OnRamp, HoldUp, LongHaul, BackSwing, DoubleDown 4, and RoadTrip
- Easily secures E-Bikes, mountain bikes, threaded bike racks, and the Yakima® bike rack itself!

"80-125" Series

Fits 1-1/4" Receivers

- 1/2" diameter pin designed for 1-1/4" hitch receivers
- Excellent for locking up smaller trailers, bikes, coolers, and more!
- Works with cars, crossovers, and vans that have a 1-1/4" trailer hitch receiver

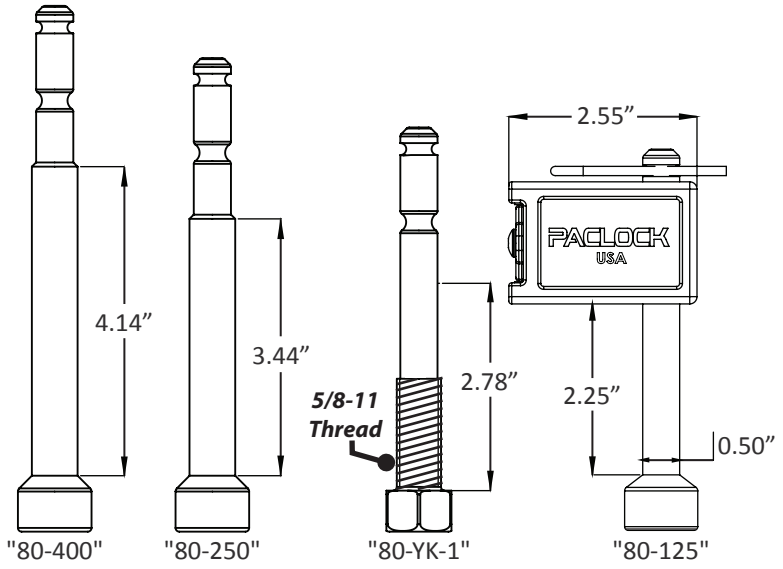

Why the Cotter Pin?

Added insurance! While developing the locking hitch pin, many customers shared horror stories of locks simply "falling off" while towing. First off, that will never happen with PACLOCK! Wanting to give some peace of mind to customers, PACLOCK added a cotter pin to the end of the lock. The added benefit of not needing to lock up when moving the trailer around the yard.

	Series	Hitch Size	Body	Options	PAC-BAND
UCS	UCS-80A-125	1-1/4"	Aluminum	5A - Pg. 64	•
	UCS-80S-125	1-1/4"	Stainless Steel	5A - Pg. 64	•
	UCS-80A-250	2", 2-1/2", 3"	Aluminum	5A - Pg. 64	•
	UCS-80S-250	2", 2-1/2", 3"	Stainless Steel	5A - Pg. 64	•
	UCS-80A-400	4"	Aluminum	5A - Pg. 64	•
	UCS-80S-400	4"	Stainless Steel	5A - Pg. 64	•
	UCS-80A-YK-1	Yakima®	Aluminum	5A - Pg. 64	•
	UCS-80S-YK-1	Yakima®	Stainless Steel	5A - Pg. 64	•
P	TL80A-125	1-1/4"	Aluminum	5B - Pg. 64	•
	TL80S-125	1-1/4"	Stainless Steel	5B - Pg. 64	•
	TL80A-250	2", 2-1/2", 3"	Aluminum	5B - Pg. 64	•
	TL80S-250	2", 2-1/2", 3"	Stainless Steel	5B - Pg. 64	•
	TL80A-400	4"	Aluminum	5B - Pg. 64	•
	TL80S-400	4"	Stainless Steel	5B - Pg. 64	•
	TL80A-YK1	Yakima®	Aluminum	5B - Pg. 64	•
	TL80S-YK1	Yakima®	Stainless Steel	5B - Pg. 64	•

All trademarks, service marks and company names are the property of their respective owners.

Container Doors

The Best Lock for Container Doors

- Patented, form-fitting, 6061 aircraft-grade aluminum body built to secure containers
- Built with rust-resistant components to withstand harsh weather conditions
- One-piece locking system – no extra hasp or mounting required
- Keep your lock secured to your container with the PAC-TETHER™
- Key into all of your PACLOCKs – Every Lock, One Key™

U.S. PATENTED

U.S. Patent 10,745,936

No Shackle to Cut!

A hidden-shackle padlock eliminates the possibility of a bolt-cutter attack and keeps your cargo secured. For decades, the industry norm for "high security" has been thick-shackled, shrouded padlocks. Our engineering team put years into developing hidden-shackled padlocks for trailer doors and couplers, containers, roll-up doors, and other applications where shackled padlocks have always been the standard in physical security.

The hidden-shackle design of the "82" Series makes it far easier to install and remove than other bolt-on solutions. Never worry about sticking your hand up into a web of spiders again because your container has a box with a padlock tucked away. To make the "82" even easier to use, the included PAC-TETHER™ cable allows you to fasten your lock directly onto your container door, so you'll never lose it.

	Series	Body	Options	PAC BAND
UCS	UCS-82A	Aluminum	5A - Pg. 64	•
P	TL82A	Aluminum	5B - Pg. 64	•
IC	TL82A-IC	Aluminum	5C - Pg. 64	•
A	LFIC-ASA-TL82A	Aluminum	5C - Pg. 64	•
COR	LFIC-COR-TL82A	Aluminum	5C - Pg. 64	•
M32	LFIC-M32-TL82A	Aluminum	5C - Pg. 64	•
SGT	LFIC-SGT-TL82A	Aluminum	5C - Pg. 64	•
Y6	LFIC-Y6-TL82A	Aluminum	5C - Pg. 64	•
Y7	LFIC-Y7-TL82A	Aluminum	5C - Pg. 64	•
KiK	KiK-TL82A	Aluminum	5C - Pg. 64	•
FSIC	FSIC-TL82A	Aluminum	5C - Pg. 64	•

Utility 3000R Trailer Lock

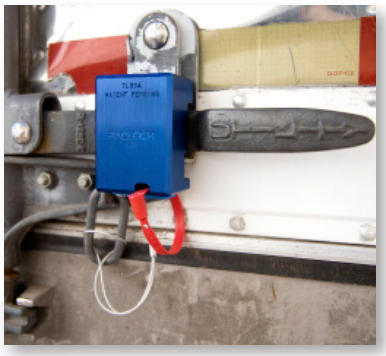

The Pinacle of Transportation Security

The "89" Series is specifically designed and manufactured for Utility 3000R® refrigerated trailer door handles and prevents any type of bolt-cutter attack. Whether you're hauling cargo through a port or running meat on a delivery route, the "89" Series trailer lock keeps your load sealed and secure – satisfying two requirements with just one padlock. Additionally, the lock's recessed keyway design makes it more resistant to picking attacks than other padlocks.

As with all aluminum PACLOCKs, the "89" Series of locks can be anodized with a choice of 10 colors. It can be laser engraved with your logo or other information, and they can even come with your logo hard stamped. Keying options vary from keying all of your PACLOCKs together to building a complex grand-master-keying system across your PACLOCK line of padlocks.

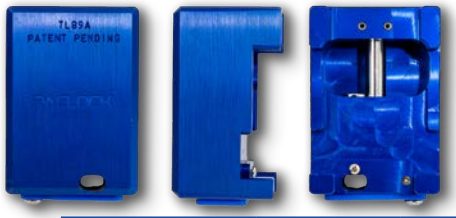

U.S. PATENTED

U.S. Patent 10,745,936

Key Features

- Form-fitting design for the Utility 3000R® trailer door handles
- Additional hole allows for a seal to be used
- Lock can't be opened without breaking the seal
- With only one moving part, the lock continues operating smooth – even in harsh climates

The seal feature takes security one step further as it combines the security features of a padlock with the tamper resistance of a seal.

	Series	Body	Options	PAC BAND
UCS	UCS-89A	Aluminum	5A - Pg. 64	•
P	TL89A	Aluminum	5B - Pg. 64	•
IC	TL89A-IC	Aluminum	5C - Pg. 64	•
A	LFIC-ASA-TL89A	Aluminum	5C - Pg. 64	•
COR	LFIC-COR-TL89A	Aluminum	5C - Pg. 64	•
M32	LFIC-M32-TL89A	Aluminum	5C - Pg. 64	•
SGT	LFIC-SGT-TL89A	Aluminum	5C - Pg. 64	•
Y6	LFIC-Y6-TL89A	Aluminum	5C - Pg. 64	•
Y7	LFIC-Y7-TL89A	Aluminum	5C - Pg. 64	•
KiK	KiK-TL89A	Aluminum	5C - Pg. 64	•
FSIC	FSIC-TL89A	Aluminum	5C - Pg. 64	•

Roll-Up Door Padlock

U.S. PATENTED

U.S. Patent 10,745,936

Protect Your Hook

- The only padlock specifically engineered for Todco® and Whiting® roll-up truck doors
- Same padlock works with both handle types – just install a different hasp
- High-security, bolt-cutter proof, hockey-puck-style design
- Includes mounting hardware to easily install the hasp
- One-handed design makes it easy to lock and unlock

There's NO Shackle to Cut!

PACLOCK's "84" Series is the only high-security solution that protects and defends the most critical point of your roll-up truck door's latching system – the hook. If the hook cannot be moved, then the door cannot be opened. In the past, Todco® and Whiting® handles have been locked with shackled padlocks that only protect the handle. Within seconds, a grinder could cut through the pot-metal handle and completely bypass the regular shackled padlock. The solid-body design of the "84" Series directly blocks the hook from moving and – since it doesn't use the typical locking area – it also allows for a seal to be utilized.

Built for Todco & Whiting

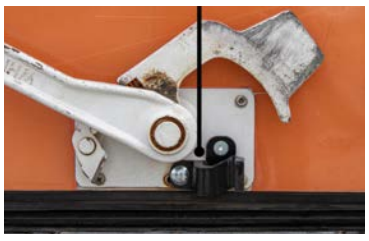

3 Easy Steps to Install

With the handle in the closed position, slide the hasp under the handle, then mark and drill the bolt hole. Install the carriage bolt. Continue by opening the handle, marking, and drilling the second hole. Install the flathead bolt. With the hasp installed, close the handle and install the lock onto the hasp.

Series	Body	Options	PAC BAND
UCS-84A	Aluminum	5A - Pg. 64	•
TL84A	Aluminum	5B - Pg. 64	
TL84A-IC	Aluminum	5C - Pg. 64	
LFIC-ASA-TL84A	Aluminum	5C - Pg. 64	
LFIC-COR-TL84A	Aluminum	5C - Pg. 64	
LFIC-M32-TL84A	Aluminum	5C - Pg. 64	
LFIC-SGT-TL84A	Aluminum	5C - Pg. 64	
LFIC-Y6-TL84A	Aluminum	5C - Pg. 64	
LFIC-Y7-TL84A	Aluminum	5C - Pg. 64	
KiK-TL84A	Aluminum	5C - Pg. 64	
FSIC-TL84A	Aluminum	5C - Pg. 64	

Sealed Trailer Door Lock

U.S. Patent 10,745,936

High Security Cargo Lock

- Designed for swing trailer door handles
- Don't choose between a padlock or a seal – get both.
- Bolt-cutter proof, hidden-shackle technology
- Unique PAC-TETHER™ keeps the lock attached via cable to your trailer

There's A Seal Too?!

When delivering cargo through shipping ports, grocery stores, or anywhere where a seal is required, the seal variant of the "81" Series trailer door lock provides the best of both worlds – high security along with room for a seal. The "81A-Seal" Series cylinder cannot be opened without removing the seal. The design of the "81A-Seal" shows off the huge advantage PACLOCK has from manufacturing in the United States: being able to quickly alter an existing product to meet specific requests from customers.

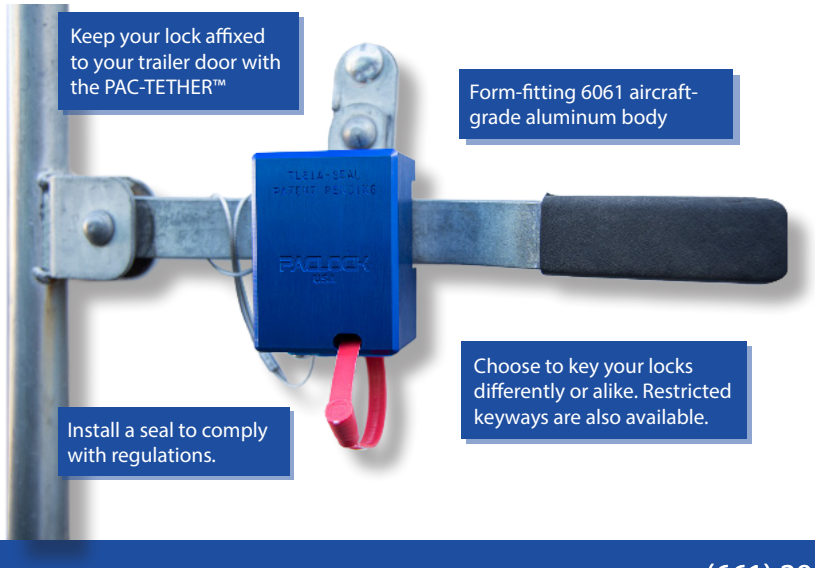

	Series	Body	Options	PAC BAND
UCS	UCS-81A-Seal	Aluminum	5A - Pg. 64	•
P	TL81A-Seal	Aluminum	5B - Pg. 64	•
IC	TL81A-IC-Seal	Aluminum	5C - Pg. 64	•
A	LFIC-ASA-TL81A-Seal	Aluminum	5C - Pg. 64	•
COR	LFIC-COR-TL81A-Seal	Aluminum	5C - Pg. 64	•
M32	LFIC-M32-TL81A-Seal	Aluminum	5C - Pg. 64	•
SGT	LFIC-SGT-TL81A-Seal	Aluminum	5C - Pg. 64	•
Y6	LFIC-Y6-TL81A-Seal	Aluminum	5C - Pg. 64	•
Y7	LFIC-Y7-TL81A-Seal	Aluminum	5C - Pg. 64	•
KiK	KiK-TL81A-Seal	Aluminum	5C - Pg. 64	•
FSIC	FSIC-TL81A-Seal	Aluminum	5C - Pg. 64	•

Shutter Locks

Upgrade Your Chain Security

PACLOCK's "17" Series doesn't deviate from the PACLOCK way of challenging the existing, low security padlock designs like shackled padlocks. Designed with feedback from two of the most well-known names in lockpicking, the "17" Series of locks provide considerably more security than a regular shackled padlock thanks to their hidden-shackle design. Chains, sheds, and even various trailer hitch locks can be secured using one of 3 "Block Lock" sizes. When locked, the U-shaped design protects the shackle from being cut – one of the most common ways padlocks is defeated.

Perfect fit for underbody storage boxes!

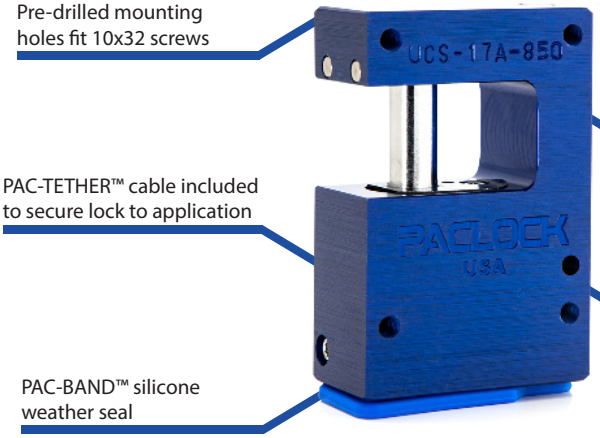

Pre-drilled mounting holes fit 10x32 screws

Stainless-steel security pin machine-pressed into the body to stop sawing

PAC-TETHER™ cable included to secure lock to application

Solid 6061 aircraft-grade aluminum body

PAC-BAND™ silicone weather seal

Unlimited Uses

Storage containers, motorcycles, gates, and sheds are just a few of the possible places where Block Locks can be used to upgrade your security game. With three sizes available, it's easy to choose the perfect lock to fit your specific application. The "600" Series fits snug on motorcycle wheels, the "850" Series works best on containers, and the "1100" Series is the perfect lock to use on the back of U-Haul® truck or trailer handles!

	Series	Body	Options	PAC-BAND
UCS	UCS-17A-600	Aluminum	5A - Pg. 64	•
	UCS-17A-850	Aluminum	5A - Pg. 64	•
	UCS-17A-1100	Aluminum	5A - Pg. 64	•
P	BL17A-600	Aluminum	5B - Pg. 64	•
	BL17A-850	Aluminum	5B - Pg. 64	•
	BL17A-1100	Aluminum	5B - Pg. 64	•
IC	BL17A-600-IC	Aluminum	5C - Pg. 64	•
	BL17A-850-IC	Aluminum	5C - Pg. 64	•
	BL17A-1100-IC	Aluminum	5C - Pg. 64	•
A	LFIC-ASA-BL17A-600	Aluminum	5C - Pg. 64	•
	LFIC-ASA-BL17A-850	Aluminum	5C - Pg. 64	•
	LFIC-ASA-BL17A-1100	Aluminum	5C - Pg. 64	•
COR	LFIC-COR-BL17A-600	Aluminum	5C - Pg. 64	•
	LFIC-COR-BL17A-850	Aluminum	5C - Pg. 64	•
	LFIC-COR-BL17A-1100	Aluminum	5C - Pg. 64	•
M32	LFIC-M32-BL17A-600	Aluminum	5C - Pg. 64	•
	LFIC-M32-BL17A-850	Aluminum	5C - Pg. 64	•
	LFIC-M32-BL17A-1100	Aluminum	5C - Pg. 64	•
SGT	LFIC-SGT-BL17A-600	Aluminum	5C - Pg. 64	•
	LFIC-SGT-BL17A-850	Aluminum	5C - Pg. 64	•
	LFIC-SGT-BL17A-1100	Aluminum	5C - Pg. 64	•
Y6	LFIC-Y6-BL17A-600	Aluminum	5C - Pg. 64	•
	LFIC-Y6-BL17A-850	Aluminum	5C - Pg. 64	•
	LFIC-Y6-BL17A-1100	Aluminum	5C - Pg. 64	•
Y7	LFIC-Y7-BL17A-600	Aluminum	5C - Pg. 64	•
	LFIC-Y7-BL17A-850	Aluminum	5C - Pg. 64	•
	LFIC-Y7-BL17A-1100	Aluminum	5C - Pg. 64	•
KiK	KiK-BL17A-600	Aluminum	5C - Pg. 64	•
	KiK-BL17A-850	Aluminum	5C - Pg. 64	•
	KiK-BL17A-1100	Aluminum	5C - Pg. 64	•
FSIC	FSIC-BL17A-600	Aluminum	5C - Pg. 64	•
	FSIC-BL17A-850	Aluminum	5C - Pg. 64	•
	FSIC-BL17A-1100	Aluminum	5C - Pg. 64	•

Dimensions

3/8" Diam. Shackle

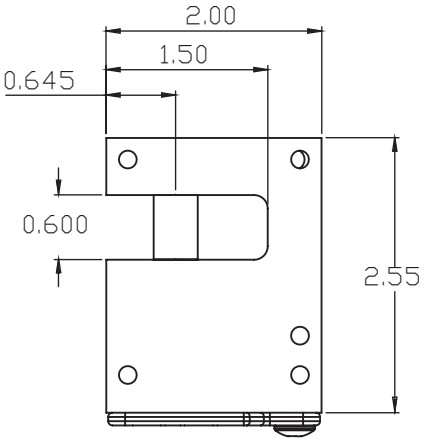

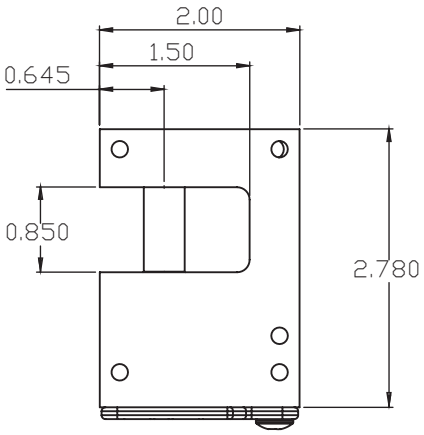

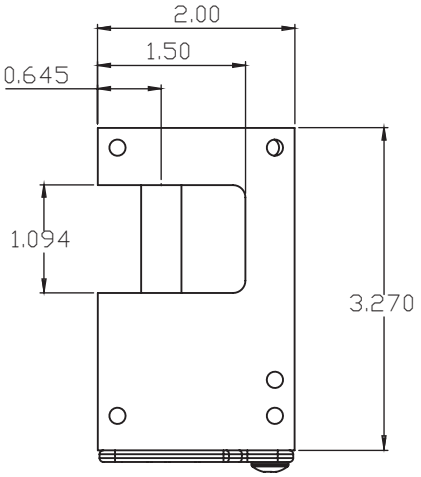

Cone-Shaped Hockey Pucks

U.S. PATENTED

U.S. Patents 8,776,557
8,978,426 & Patent
Pending

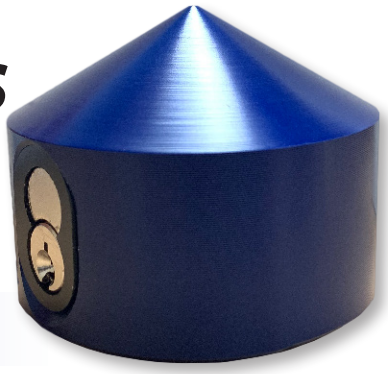

Impervious to Frontal Drill Attacks

The patented "2177/UCS-9" Series of hidden-shackle padlocks from PACLOCK are one of a kind. Instead of having a flat front, the "2177" has a cone-shaped front that makes it nearly impervious to drill attacks. The cone shape was designed in response to a customer's request to stop thieves from drilling into the front of a hockey puck while the puck is recessed in a deep tunnel. PACLOCK designed and produced the cone shape, which has completely stopped that sort of a drilling attack. The "2177/UCS-9" Series is another advantage to manufacturing in America – showing off the speed to design, test, and manufacture new padlocks without needing to build and import the product from another country!

The PAC-SLEEVE™

With PACLOCK's patented PAC-SLEEVE™ technology, PACLOCK has the ability to put any cylinder into a hockey-puck style padlock. The PAC-SLEEVE™ brings high-security or commercial cylinders and hidden-shackle designs together, letting you use hidden-shackled padlocks and keep the same cylinders you've always used. If you ever change cylinder types, PACLOCK sleeves can easily be swapped out instead of switching out the lock body – saving you the cost of a new lock.

Never Lose Your Lock Again

Every time you unlock and remove your hockey puck from its hasp, there's a chance you'll scratch your hasp, drop the lock, or even forget to put it back on. PACLOCK hockey puck and hasp kits come with Puck-to-Hasp Mounting™ capabilities – meaning you'll never need to remove your hockey puck.

	Series	Body	Options	PAC-BAND
UCS	UCS-9A	Aluminum	5A - Pg. 64	
	UCS-9S	Stainless Steel	5A - Pg. 64	
P	2177A	Aluminum	5B - Pg. 64	•
	2177S	Stainless Steel	5B - Pg. 64	•
IC	2177A-IC	Aluminum	5C - Pg. 64	
	2177S-IC	Stainless Steel	5C - Pg. 64	
A	LFIC-ASA-2177A	Aluminum	5C - Pg. 64	
	LFIC-ASA-2177S	Stainless Steel	5C - Pg. 64	
COR	LFIC-COR-2177A	Aluminum	5C - Pg. 64	
	LFIC-COR-2177S	Stainless Steel	5C - Pg. 64	
M32	LFIC-M32-2177A	Aluminum	5C - Pg. 64	
	LFIC-M32-2177S	Stainless Steel	5C - Pg. 64	
SGT	LFIC-SGT-2177A	Aluminum	5C - Pg. 64	
	LFIC-SGT-2177S	Stainless Steel	5C - Pg. 64	
Y6	LFIC-Y6-2177A	Aluminum	5C - Pg. 64	
	LFIC-Y6-2177S	Stainless Steel	5C - Pg. 64	
Y7	LFIC-Y7-2177A	Aluminum	5C - Pg. 64	
	LFIC-Y7-2177S	Stainless Steel	5C - Pg. 64	
KiK	KiK-2177A	Aluminum	5C - Pg. 64	
	KiK-2177S	Stainless Steel	5C - Pg. 64	
FSIC	FSIC-2177A	Aluminum	5C - Pg. 64	
	FSIC-2177S	Stainless Steel	5C - Pg. 64	

Quick Facts

11 Cylinder Options Available

6061 Aluminum or 304 Stainless Body

Puck-to-Hasp™ Mounting

BAA/TAA Compliant

Bolt-Cutter Proof

Frontal Attack Proof

Body Width: 2-7/8"

Dimensions

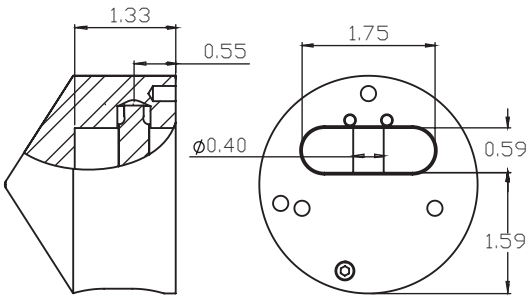

3/8" Diam. Shackle

Flat Back Hockey Pucks

U.S. PATENTED

U.S. Patent 8,776,557
U.S. Patent 8,978,426

High-Security Hockey Pucks

The "2173/UCS-7" Series by PACLOCK is more than your general-purpose, high-security, hidden-shackle padlock line. PACLOCKs "2173/UCS-7" Series is the most diverse hockey-puck-style padlock line in the world with options for interchangeable cores, 10 colors, 3 material types and completely customizable keying options to fit your needs.

When you need ultimate security, a hockey-puck-style padlock mounted to a steel hasp is the best way to go. Most commonly used on van doors – including sliding van doors – PACLOCK pucks can also be found securing warehouse doors and even explosive ordinance bunkers. Our puck locks shine when they're used with our "PL810" or "PL770" hasps. Precision CNC machines drill and tap holes into the back of our locks so that they can easily be mounted to any PACLOCK hasp. When mounted, you'll never have to worry about leaving your puck lock behind.

Which Style Best Suits Your Application??

PACLOCK manufactures 3 unique hockey-puck-style designs: a flat-back, stepped-back, and cone-shaped design, each built for a unique purpose. Flatback pucks – the "2173/UCS-7" and "2177/UCS-9" Series – work great mounted on hasps so you'll never lose your puck! For added security, we developed a patent-pending, cone-shaped design – the "2177/UCS-9" Series – to prevent frontal drilling attacks. Finally, our stepped-back, hockey-puck-style padlock – the "400/UCS-8" Series – features a step back, or ledge, on the back of the padlock that allows it to work with certain bar style hasps. 6061 aircraft-grade aluminum puck locks are superior to die-cast zinc and, for higher security, we manufacture puck locks using 304 stainless steel.

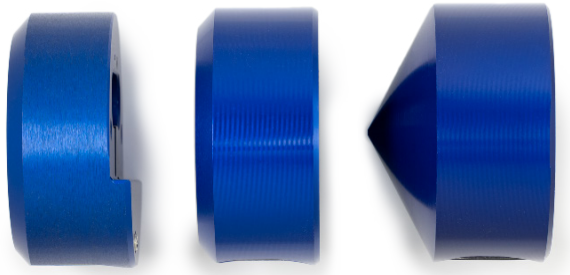

"400/UCS-8" "2173/UCS-7" "2177/UCS-9"

Perfect for Sliding Van Doors

Combine any flat-back "puck lock" with a PL810 or PL811 hasp to secure your sliding van doors. The unique design allows the puck and hasp to remain attached to the door while sliding open. Manufacturing in the U.S. allows PACLOCK to fully customize the hasp and puck color to meet your needs. Have a fleet of vans that needs master-keying and a puck-hasp-kit that blends in? Reach out to us and we can make it happen.

	Series	Body	Options	PAC-BAND
UCS	UCS-7A	Aluminum	5A - Pg. 64	
	UCS-7S	Stainless Steel	5A - Pg. 64	
P	2173A	Aluminum	5B - Pg. 64	•
	2173S	Stainless Steel	5B - Pg. 64	•
IC	2173A-IC	Aluminum	5C - Pg. 64	
	2173S-IC	Stainless Steel	5C - Pg. 64	
A	LFIC-ASA-2173A	Aluminum	5C - Pg. 64	
	LFIC-ASA-2173S	Stainless Steel	5C - Pg. 64	
COR	LFIC-COR-2173A	Aluminum	5C - Pg. 64	
	LFIC-COR-2173S	Stainless Steel	5C - Pg. 64	
M32	LFIC-M32-2173A	Aluminum	5C - Pg. 64	
	LFIC-M32-2173S	Stainless Steel	5C - Pg. 64	
SGT	LFIC-SGT-2173A	Aluminum	5C - Pg. 64	
	LFIC-SGT-2173S	Stainless Steel	5C - Pg. 64	
Y6	LFIC-Y6-2173A	Aluminum	5C - Pg. 64	
	LFIC-Y6-2173S	Stainless Steel	5C - Pg. 64	
Y7	LFIC-Y7-2173A	Aluminum	5C - Pg. 64	
	LFIC-Y7-2173S	Stainless Steel	5C - Pg. 64	
KiK	KiK-2173A	Aluminum	5C - Pg. 64	
	KiK-2173S	Stainless Steel	5C - Pg. 64	
FSIC	FSIC-2173A	Aluminum	5C - Pg. 64	
	FSIC-2173S	Stainless Steel	5C - Pg. 64	

Quick Facts

11 Cylinder Options Available

6061 Aluminum or 304 Stainless Body

Puck-to-Hasp™ Mounting

BAA/TAA Compliant

Bolt-Cutter Proof

Flat-Back Design

Body Width: 2-7/8"

Dimensions

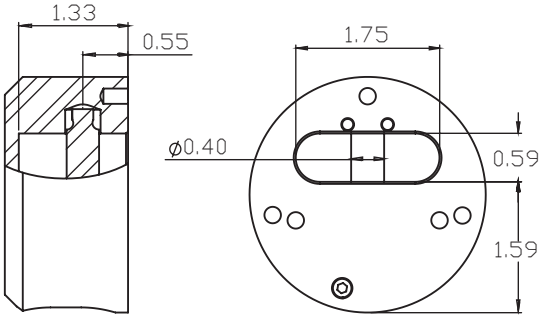

3/8" Diam. Shackle

Stepped Back Hockey Pucks

U.S. PATENTED

U.S. Patent 8,776,557
U.S. Patent 8,978,426

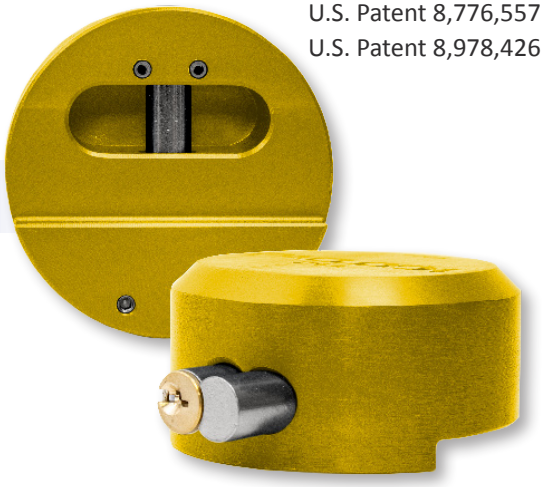

Forget About "Torque Attacks"

The "400/UCS-8" Series from PACLOCK is your classic "stepped-back" version of a hidden-shackle, hockey-puck-style padlock. When circular-shaped, hidden-shackle padlocks were introduced years ago, there weren't any shrouded hasps. Instead, customers tried to find ways to use these tough padlocks to replace a traditional shackled padlock. The problem was that a flat-back puck lock installed on a bar-style hasp was prone to a "torque attack" – an attack where you grip the side of the lock with a large pipe wrench and literally torque off the cheap staple of the hasp. To prevent this style of attack, the stepped-back puck was introduced.

Great for Bar-Style Hasps

The ¼" step in the back of the puck was deliberately engineered to mate up and overlap with the bottom of a bar hasp. This overlap effectively protected against a torque attack because the entire padlock body was now pushed up against the hasp. But with the advent of "shrouded" hasps in the past ten years, stepped-back pucks are becoming obsolete. Using a stepped-back puck in a shrouded hasp is less secure because of the gaps created by the wobble from the puck not being flat against the base of the hasp.

TL81As in Action!

Trailer Door Security of the Past

Plan on using the "400/UCS-8" Series of padlocks for you swinging trailer latch? Use the "TL81" Series instead! Here's what one of our customers said about the "81" Series:

The TL81A trailer lock is going to change trailer security forever. The lock units themselves are solid. You wouldn't expect such a compact package to have this much heft. The locking mechanism is solid as well, the shackle itself is very sturdy and completely protected from attack when locked on the trailer hasps. I will take some pictures when I can and post them up to this review. The way this fits on the hasps and handle become exceptionally hard to target for entry.

I have these mounted on Look® and Stealth® trailers, no issues with fit for either. I will note that I did have to get the trailer handle positioned in the cut-out of the locks before they could be locked, but that makes sense. I really don't want any "slop" in the fit that opens an avenue for attack.

–Bryant

	Series	Body	Options	PAC-BAND
UCS	UCS-8A	Aluminum	5A - Pg. 64	
	UCS-8S	Stainless Steel	5A - Pg. 64	
P	400A	Aluminum	5B - Pg. 64	•
	400S	Stainless Steel	5B - Pg. 64	•
IC	400A-IC	Aluminum	5C - Pg. 64	
	400S-IC	Stainless Steel	5C - Pg. 64	
A	LFIC-ASA-400A	Aluminum	5C - Pg. 64	
	LFIC-ASA-400S	Stainless Steel	5C - Pg. 64	
COR	LFIC-COR-400A	Aluminum	5C - Pg. 64	
	LFIC-COR-400S	Stainless Steel	5C - Pg. 64	
M32	LFIC-M32-400A	Aluminum	5C - Pg. 64	
	LFIC-M32-400S	Stainless Steel	5C - Pg. 64	
SGT	LFIC-SGT-400A	Aluminum	5C - Pg. 64	
	LFIC-SGT-400S	Stainless Steel	5C - Pg. 64	
Y6	LFIC-Y6-400A	Aluminum	5C - Pg. 64	
	LFIC-Y6-400S	Stainless Steel	5C - Pg. 64	
Y7	LFIC-Y7-400A	Aluminum	5C - Pg. 64	
	LFIC-Y7-400S	Stainless Steel	5C - Pg. 64	
KiK	KiK-400A	Aluminum	5C - Pg. 64	
	KiK-400S	Stainless Steel	5C - Pg. 64	
FSIC	FSIC-400A	Aluminum	5C - Pg. 64	
	FSIC-400S	Stainless Steel	5C - Pg. 64	

Quick Facts

11 Cylinder Options Available

6061 Aluminum or 304 Stainless Body

Puck-to-Hasp™ Mounting

BAA/TAA Compliant

Bolt-Cutter Proof

Torque-Proof Design

Body Width: 2-7/8"

Dimensions

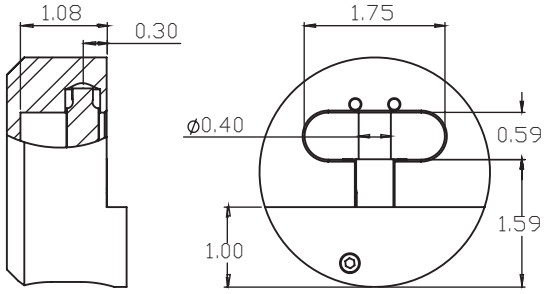

3/8" Diam. Shackle

High Security Hasps

Pair any hasp with PACLOCK puck locks for ultimate security.

Extra Bolt Hidden Under Puck

The Next Generation Of Hasps

PACLOCKs high-security hasps are built to withstand both physical and environmental attacks. Manufactured from ¼" steel plates, PACLOCK hasps are zinc plated and then powdered coated to provide ultimate protection from rain, snow, or the beating sun. Hidden mounting bolts, Puck-To-Hasp™ mounting, and custom hasp styles are a few reasons why PACLOCK truly is "The Future of Padlocks." Improving existing designs and removing weak points from security systems makes criminals pass up on PACLOCK hasps and attack weaker, easier-to-defeat padlocks. With a PACLOCK hasp, your van becomes a vault, your yard becomes Scotland Yard, and your security becomes something you'll never worry about again.

Puck-To-Hasp™ Mounting

Designed with the customer in mind, every PACLOCK hasp comes standard with special tapped holes allowing PACLOCK's hockey-puck-style padlocks to be mounted directly onto one side of the hasp.

If you need a puck and a hasp, order a kit! PACLOCK hasp and hockey puck kits come affixed to one another with two stainless-steel screws. A mounted puck means you'll never lose your puck – it's always secured to the hasp.

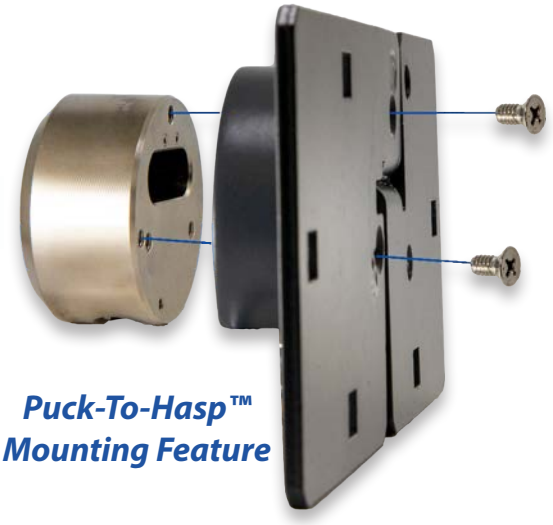

Puck-To-Hasp™ Mounting Feature

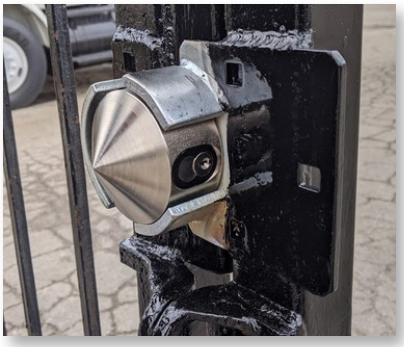

Need to weld your hasp? Ask us about our non-powder-coated hasps. Just weld and paint!

Hidden Bolt Security

Shrouded style hasps for hockey pucks haven't seen innovation in a long time – until PACLOCK's versions of these hasps were released. One of the primary attack points on older shrouded hasps are the carriage bolt heads holding the hasp to the door. Any 18V cordless grinder can go through those in a matter of minutes. And once one side is ground off, the entire solution is defeated.

With PACLOCK's innovative design, there is an additional mounting point hidden underneath the puck itself. Now once the three or six exposed carriage bolts are defeated, the perpetrator will be perplexed as to why the hasp isn't falling off the door!

Hasps Compatible with Round, Hidden Shackle Padlocks

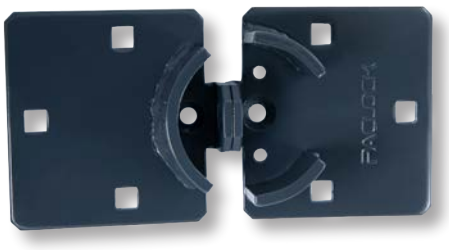

PL770

- Most common high-security hasp design
- Compatible with all 2-7/8" diameter flat-back hockey-puck locks
- Hidden bolts prevent common attack of grinding off exposed bolt heads

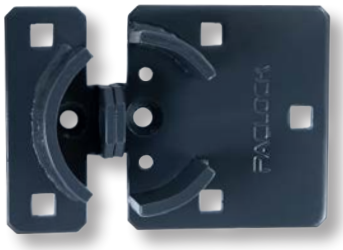

PL775

- Short hasp design allows for high security in limited spaces
- Ideal for gates, vans, trucks, doors, and other limited-installation environments
- Same design as the PL770, but the short side measures 2" x 4.5" to fit in tight spaces

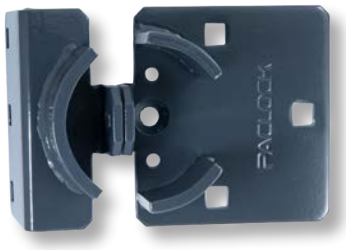

PL779

- 90-degree bend allows the hasp to wrap around corners
- Ideal for cabinets, electrical boxes, fences or any corner applications
- Includes Puck-To-Hasp™ mounting capabilities and hidden-bolt head installation

PL810

- Only retail hasp that is coated with zinc then powder coated second for superior rust protection
- Works with ***right side*** sliding van doors
- When the door opens, pops out enough to slide over the hasp

PL811

- Like the PL810, the 811 series is zinc plated, then powder coated for superior rust protection
- Works with ***left side*** sliding van doors
- When the door opens, pops out enough to slide over the hasp

Hasp Backplates

- Add stability to weaker mounting applications such as plastic sheds
- Strengthen opposite side of the door where hasp is mounted
- Use one or more when mounting hasps on uneven surfaces

Chain Security

Buy Chain By The Foot to Secure Your Application

Patented "Puck-Link" Chain Security

PACLOCK's patented "Puck-Link™" chain-locking-system is truly unique. Most cable locks can easily be snipped with a pair of shears and even when using high-strength security chain and a padlock, the shackle can simply be cut. PACLOCK spent years engineering a shackleless design to solve these problems and provide an all-in-one chain-locking-system that keys into existing systems.

Secure your ladders, motorcycles, bikes, generators and power tools. Buy any length of chain to fit your application. The "6" Series is easy to use and includes a mounting plate that makes securing your gate, van, trailer, generator, or anything that needs a chain simple!

U.S. PATENTED

U.S. Patent 10,047,547

6A Puck-Link™

High-Security 3/8" Chain Security

Ideal for ladder racks, gates, motorcycles, bikes, generators - wherever chain security is needed
Easy one-handed, pop-top operation with powder coated mounting plate
Buy with any length of USA Made 3/8" hardened steel square chain
The 6061 aircraft-grade aluminum solid body's shackle-less design leaves no shackle to cut
Puck-Link™ made from all brass, aluminum and stainless-steel components rendering it rustproof
Tested to over 3,600 lbs. of pull resistance
Chain can be easily removed and swapped - the lock accepts 5/16 in. to 3/8 in. chain of any length

	Series	Body	Options	PAC-BAND
UCS	UCS-6A	Aluminum	5A - Pg. 64	•
P	6A	Aluminum	5B - Pg. 64	•
IC	6A-IC	Aluminum	5C - Pg. 64	•
A	LFIC-ASA-6A	Aluminum	5C - Pg. 64	•
COR	LFIC-COR-6A	Aluminum	5C - Pg. 64	•
M32	LFIC-M32-6A	Aluminum	5C - Pg. 64	•
SGT	LFIC-SGT-6A	Aluminum	5C - Pg. 64	•
Y6	LFIC-Y6-6A	Aluminum	5C - Pg. 64	•
Y7	LFIC-Y7-6A	Aluminum	5C - Pg. 64	•
KiK	KiK-6A	Aluminum	5C - Pg. 64	•
FSIC	FSIC-6A	Aluminum	5C - Pg. 64	•

Easy-to-Unlock

1. Turn key 1/4 turn clockwise. Top half of padlock will "pop" up.
2. Remove the chain from the right lock post and loop through desired application.
3. Re-install chain link into the lock post. (Install any link in the chain for a snug fit)
4. Turn key 1/4 turn counter-clockwise and remove.
5. Press down on the top of the padlock until it locks and does not "pop" back up.

USA-Made, High Security Chain

8mm

10mm

13mm

To complement high-security padlocks, PACLOCK sells high-security, Made in the USA, square chain. Available in 8, 10, and 13mm sizes and any length by the foot. Hardened, high-security chain can be customized to fit your exact application.

Besides the "6" Series "Puck-Link", PACLOCK's security chain works great when used with the "17" Series of padlocks by hiding the shackle from bolt cutters and making the chain the weakest link.

Key Control Systems

Revolutionary Key Control Management That Works

PAC-KEEPER™ Available in SFIC & KiK

The PAC-KEEPER is a revolutionary key management system that virtually guarantees something that other, non-electrified key control devices cannot – that the key will get returned. With the PAC-KEEPER™, the "controlled key" is locked into the device and can only be removed if a user has an approved "user key." That user can insert their user key and slide the body sideways to expose and, ultimately, remove the controlled key.

The real genius of the PAC-KEEPER™ design is that the user key cannot be retrieved without first replacing the controlled key. If you permanently tether this user key to the user's car keys, you can be rest assured that your controlled key won't go missing again. If it does, simply go to the PAC-KEEPER™ and determine which of your users left their key in the device.

No Broken Keyheads!

- Raised shoulder design protects trapped key head from breaking or being tampered with
- Built to last outdoors due to a combination of aluminum, stainless steel, and brass components
- Made in the USA
- Heavy-duty stainless-steel outer shroud protects the inner, hard-anodized-aluminum body

Compatible with Magnetic Sensors

- The PAC-KEEPER™ accepts magnetic sensors so you can connect it into your own access-control system
- With the PAC-KEEPER™ tied into your access-control system, you'll know when someone removes the controlled key
- Place an access-controlled camera near the PAC-KEEPER™ and snap a photo every time your controlled key is taken or returned!

How to Use the PAC-KEEPER

"Controlled Key"

STEP 1

"Controlled Key" is trapped and cannot be removed.

"User Key"

STEP 2

Insert "User Key" and rotate it parallel to the "Controlled Key." This unlocks the ball bearing and allows the body to slide sideways.

"Controlled Key"

STEP 3

Expose the "Controlled Key" by sliding the body.

"User Key"

STEP 4

Now remove the "Controlled Key" and your "User Key" becomes the trapped key! To reclaim the user key, reverse the process and re-trap the "Controlled Key."

Disc Padlock Pro

Stainless Steel 70mm Disc Padlock

What a Difference 2 Pins Make!

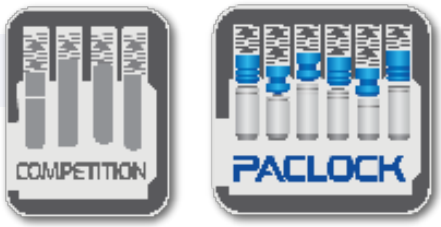

PACLOCK's "Disc Padlock Pro" stands out above other disc locks. Most disc padlocks cut costs and offer only 4-pin cylinders. When combined with low manufacturing precision, these cheap locks offer less than a few-hundred unique key combinations. PACLOCK's 6-pin cylinders and precision manufacturing provide MORE THAN 20,000 unique key combinations – a 2,000% increase over standard disc locks.

Manufactured to be Tough

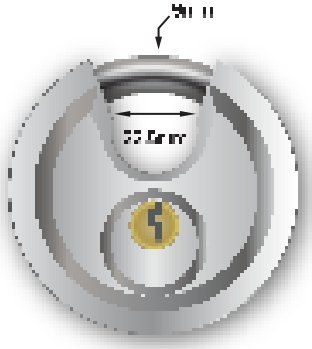

- Polished stainless-steel exterior with welded seams
- Lock casing manufactured with progressive die stamping technology for consistently superior part tolerance
- Ultrasonic cleaning eliminates debris and manufacturing residue

No Key Interchange Guarantee

This lock can only be opened by a key with the same code. If a key with a different code opens this lock, PACLOCK will replace your lock AND give you $100.

Single Post Padlock

For Utility Meters and Other Single Post Applications

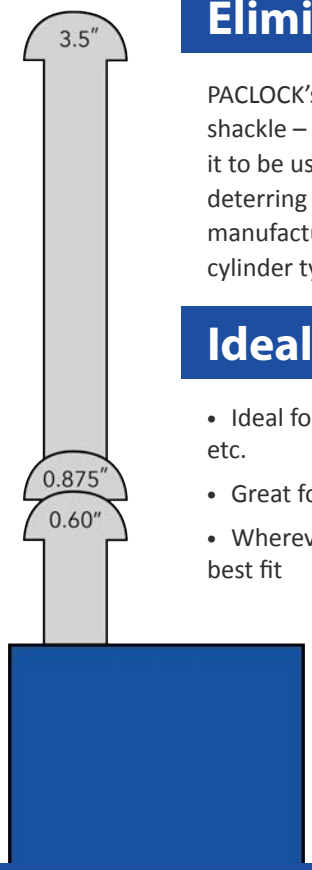

Eliminates the Exposed Shackle

PACLOCK's "443" Series single-post padlock eliminates the exposed, looped shackle – leaving little room to cut. The unique design of the "PL443" allows for it to be used in tight spaces where larger diameter shackles won't fit, while still deterring the threat of bolt-cutter attacks. Like almost every padlock type we manufacture, PACLOCK has the ability to build "PL443's" to work with your existing cylinder type.

Ideal for Vending and Meters

- Ideal for vending machines, utility meter shut-offs, storage units, etc.
- Great for sheds and workshops around your home
- Wherever a less accessible shackle is desired, PACLOCK's 443 is the best fit

PL443-IC IC

Body Width	1- 3/4"
Body Height	2-1/4"
Body Thickness	3/4"
Shackle Diameter	3/8"
Shackle Material	Stainless Steel
Body Material	Aluminum

Call us for more cylinder options!

Government Locks

Security For Government, Military, And Defense

USA Products Shipped to Warfighters

PACLOCK is the only Buy American Act compliant manufacturer of the US military's "low security" and "GSFP" padlocks. Since 2009, the US military has received more than five million PACLOCKs with a greater than 99% on-time delivery rating and all with zero returns for defects. In fact, PACLOCK's success earned Lockheed Martin "Supplier of the Year" award as their primary sub-contractor for the Fleet Automotive Support Initiative (FASI) program. During the FASI program, PACLOCK was a "direct-to-vendor delivery" (DVD) supplier – PACLOCK delivered directly from our factory to the warfighter on more than a hundred and four-thousand orders all with a one to three-day turn-around time!

Compliant with Government Standards

PACLOCK's government line is compliant with Government Standards and are all Buy American Act Compliant. These locks are a great alternative to GSA Advantage and FedMall. If you cannot find the exact lock, please contact us and we can build it.

Low Security Padlocks, CID A-A59486/59487

90GL

- 1/4” diameter shackle
- U.S. or U.S. Set engraved
- Zinc-plated, hardened steel body
- Buy American Act Compliant
- 5-pin military grade cylinder

95GL

- 1/4” diameter brass shackle
- U.S. or U.S. Set engraved
- Solid brass body
- Buy American Act Compliant
- 5-pin military-grade cylinder

100G

- 5/16” diameter shackle
- U.S. or U.S. Set engraved
- Laminated steel body
- Buy American Act Compliant
- 5-pin military-grade cylinder

100GL

- 5/16” diameter shackle
- U.S. or U.S. Set engraved
- Zinc-plated, hardened steel body
- Buy American Act Compliant
- 5-pin military-grade cylinder

150GL

- 5/16” diameter hardened steel shackle
- U.S. or U.S. Set engraved
- Solid brass body
- Buy American Act Compliant
- 5-pin military-grade cylinder

General Service Field Padlocks, FF-P-2827A

RD655

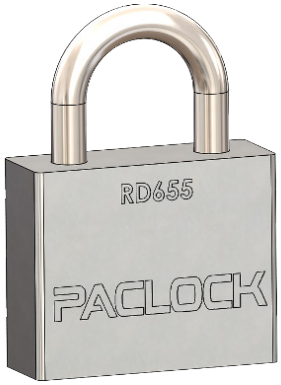

- 3/8” diameter steel shackle
- U.S. or U.S. Set engraved
- Nickel-plated, brass body
- Buy American Act Compliant
- Military-grade, rotating disc cylinder

RD656

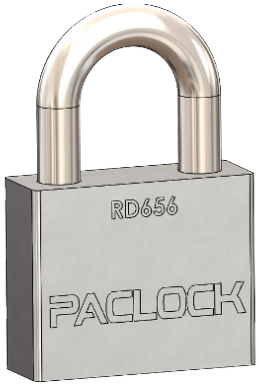

- 1/2” diameter steel shackle
- U.S. or U.S. Set engraved
- Nickel-plated, brass body
- Buy American Act Compliant
- Military-grade, rotating disc cylinder

Padlock Guide by NSN

NSN	C-ID-PIN	Total # of Locks	Qty/Set	Material	Lock Size	Shackle Length	Keyed	Keys/ Lock	Keys/ Set	Chain	Body Type	Item Name
5340-00-158-3805	A-A-59487-2S	1		Steel	Larger	Std.	KD	2		N	Laminated	100G
5340-00-158-3807	A-A-59487-2SC	1		Steel	Larger	Std.	KD	2		Y	Laminated	100G
5340-00-682-1508	A-A-59487-1BC	1		Brass	Std.	Std.	KD	2		Y	Solid	95G
5340-00-682-1645	A-A-59487-1BL	1		Brass	Std.	Long	KD	2		N	Solid	95G
5340-01-004-5180	A-A-59487-1BCL	1		Brass	Std.	Long	KD	2		Y	Solid	95G
5340-01-408-8434	A-A-59487-2IS01L	1		Steel	Larger	Long	KD	2		N	Laminated	100G
5340-01-408-8454	A-A-59487-1S	1		Steel	Std.	Std.	KD	2		N	Solid	90GL
5340-00-291-4204	A-A-59486-1IB100	100		Brass	Std.	Std.	MK	2	2	Y	Solid	95G
5340-00-291-4207	A-A-59486-1IB60	60		Brass	Std.	Std.	MK	2	2	Y	Solid	95G
5340-00-291-4209	A-A-59486-1IB40	40		Brass	Std.	Std.	MK	2	2	Y	Solid	95G
5340-00-291-4210	A-A-59486-1IB50	50		Brass	Std.	Std.	MK	2	2	Y	Solid	95G
5340-00-291-4211	A-A-59486-1IB20	20		Brass	Std.	Std.	MK	2	2	Y	Solid	95G
5340-00-291-4212	A-A-59486-1IB30	30		Brass	Std.	Std.	MK	2	2	Y	Solid	95G
5340-00-291-4213	A-A-59486-1IB05	5		Brass	Std.	Std.	MK	2	2	Y	Solid	95G
5340-00-291-4214	A-A-59486-1IB10	10		Brass	Std.	Std.	MK	2	2	Y	Solid	95G
5340-00-682-1505	A-A-59486-1AB05S2E1	5		Brass	Std.	Std.	KA	1	2	Y	Solid	95G
5340-00-838-5266	A-A-59486-1AB10S2	10		Brass	Std.	Std.	KA	2	2	Y	Solid	95G
5340-00-838-5267	A-A-59486-1AB20S2	20		Brass	Std.	Std.	KA	n/a	2	Y	Solid	95G
5340-00-838-5268	A-A-59486-1AB30S3	30		Brass	Std.	Std.	KA	2	3	Y	Solid	95G
5340-00-838-5275	A-A-59486-1AB100S10	100		Brass	Std.	Std.	KA	2	10	Y	Solid	95G
5340-00-838-6986	A-A-59486-1AB40S4	40		Brass	Std.	Std.	KA	2	4	Y	Solid	95G
5340-00-838-6987	A-A-59486-1AB50S5	50		Brass	Std.	Std.	KA	2	5	Y	Solid	95G
5340-00-912-4089	A-A-59486-1IB06S3	6		Brass	Std.	Std.	MK	2	3	Y	Solid	95G
5340-01-050-7059	A-A-59486-1AB05S2	5		Brass	Std.	Std.	KA	2	2	Y	Solid	95G
5340-01-151-4203	A-A-59486-1AB25S2E1	25		Brass	Std.	Std.	KA	1	2	Y	Solid	95G
5340-01-158-1998	A-A-59486-2AS01LE2	1		Steel	Larger	Long	KA	2	n/a	Y	Laminated	100G
5340-01-269-9345	A-A-59486-1AB05LS2E1	5		Brass	Std.	Long	KA	1	2	Y	Solid	95G
5340-01-340-8871	A-A-59486-1IB15	15		Brass	Std.	Std.	MK	2	2	Y	Solid	95G
5340-01-408-8450	A-A-59486-2IB01	1		Brass	Larger	Std.	MK	n/a	n/a	Y	Solid	150GL
5340-01-408-8452	A-A-59486-2AS10S0E2	10		Steel	Larger	Std.	KA	2	0	N	Laminated	100G
5340-01-437-0625	A-A-59486-2AS06S0E2	6		Steel	Larger	Std.	KA	2	0	N	Laminated	100G
5340-01-437-0627	A-A-59486-2AS24S48	24		Steel	Larger	Long	KA	2	48	N	Laminated	100G
5340-01-437-0630	A-A-59486-2AS06LS12	6		Steel	Larger	Long	KA	n/a	12	N	Laminated	100G
5340-00-292-0902	A-A-59486-1IB13050503	13	5-5-3	Brass	Std	Std	MK	2	2	N	Solid	95G
5340-00-292-0904	A-A-59486-1IB30151005	30	15-10-5	Brass	Std	Std	MK	2	2	Y	Solid	95G
5340-00-292-0906	A-A-59486-1IB50202010	50	20-20-10	Brass	Std	Std	MK	2	2	Y	Solid	95G
5340-00-406-6496	A-A-59486-2IB55351010L	55	35-10-10L	Brass	Larger	Long	MK	2	2	Y	Solid	150GL
5340-00-409-3246	A-A-59486-1IB301510L05	30	15-10L-5	Brass	Std	Long	MK	2	2	Y	Solid	95G
5340-00-409-3247	A-A-59486-2IB804520L15	80	45-20L-15	Brass	Larger	Long	MK	2	2	Y	Solid	150GL
5340-00-409-3248	A-A-59486-2IB80501515L	80	50-15-15L	Brass	Larger	Long	MK	2	2	Y	Solid	150GL
5340-00-421-9382	A-A-59486-1IB4020L1505	40	20L-15-5	Brass	Std	Long	MK	2	2	Y	Solid	95G
5340-00-682-1506	A-A-59486-2IB80303020	80	30-30-20	Brass	Larger	Std	MK	2	2	Y	Solid	150GL

NSN	CID-PIN	Total # of Locks	Qty/Set	Material	Lock Size	Shackle Length	Keyed	Keys/ Lock	Keys/ Set	Chain	Body Type	Item Name
5340-01-588-1010	A-A-59487-2SCS	1		Steel	Larger	Std	KD	2		Y		100GL
5340-01-588-1036	A-A-59487-2SS	1		Steel	Larger	Std	KD	2		N		100GL
5340-01-588-1709	A-A-59487-1BLS	1		Brass	Std	Long	KD	2		N	Solid	95G
5340-01-588-1819	A-A-59487-1BCS	1		Brass	Std	Std	KD	2		Y	Solid	95G
5340-01-588-1863	A-A-59487-1BCLS	1		Brass	Std	Long	KD	2		Y	Solid	95G
5340-01-600-9012	A-A-59487-1SS	1		Steel	Std	Std	KD	2		N	Solid	90GL
5340-01-463-5841	A-A-59486	10		Steel	Std	Std	KA	2	1	N	Solid	90GL
5340-01-484-8654	A-A-59486-1AB03S2	3		Brass	Std	Std	KA	0	2	N	Solid	95G
5340-01-588-1031	A-A-59486-1IB100S	100		Brass	Std	Std	MK	2	2	Y	Solid	95G
5340-01-588-1044	A-A-59486-1IB40S	40		Brass	Std	Std	MK	2	2	Y	Solid	95G
5340-01-588-1063	A-A-59486-1IB50S	50		Brass	Std	Std	MK	2	2	Y	Solid	95G
5340-01-588-1091	A-A-59486-1IB20S	20		Brass	Std	Std	MK	2	2	Y	Solid	95G
5340-01-588-1563	A-A-59486-1IB30S	30		Brass	Std	Std	MK	2	2	Y	Solid	95G
5340-01-588-1567	A-A-59486-1IB05S	5		Brass	Std	Std	MK	2	2	Y	Solid	95G
5340-01-588-1582	A-A-59486-1IB10S	10		Brass	Std	Std	MK	2	2	Y	Solid	95G
5340-01-588-1676	A-A-59486-1AB05S2E1S	5		Brass	Std	Std	KA	1	2	Y	Solid	95G
5340-01-588-1827	A-A-59486-1AB10S2S	10		Brass	Std	Std	KA	2	2	Y	Solid	95G
5340-01-588-1831	A-A-59486-1AB20S2S	20		Brass	Std	Std	KA	2	2	Y	Solid	95G
5340-01-588-1838	A-A-59486-1AB30S3S	30		Brass	Std	Std	KA	2	3	Y	Solid	95G
5340-01-588-1841	A-A-59486-1AB100S10S	100		Brass	Std	Std	KA	2	10	Y	Solid	95G
5340-01-588-1846	A-A-59486-1AB06S3S	6		Brass	Std	Std	KA	2	3	Y	Solid	95G
5340-01-588-1891	A-A-59486-1AB05S2S	5		Brass	Std	Std	KA	2	2	Y	Solid	95G
5340-01-588-1895	A-A-59486-1AB25S2E1S	25		Brass	Std	Std	KA	1	2	Y	Solid	95G
5340-01-588-1905	A-A-59486-2AS01LE2S	1		Steel	Larger	Long	KA	2		Y		100GL
5340-01-588-1911	A-A-59486-1AB05LS2E1S	5		Brass	Std	Long	KA	1	2	Y	Solid	95G
5340-01-588-1916	A-A-59486-2IS01LS	1		Steel	Larger	Long	MK	2	2	Y		100GL
5340-01-588-1924	A-A-59486-2IB01S	1		Brass	Larger	Std	MK	2	2	Y	Solid	150GL
5340-01-588-1928	A-A-59486-2AS10S0E2S	10		Steel	Larger	Std	KA	2		Y		100GL
5340-01-588-1954	A-A-59486-2AS06S0E2S	6		Steel	Larger	Std	KA	2		N		100GL
5340-01-588-1960	A-A-59486-2AS24S48S	24		Steel	Larger	Std	KA	2	48	Y		100GL
5340-01-611-8130	A-A-59486-2AS06LS12S	6		Steel	Larger	Long	KA	2	12	Y		100GL
5340-01-588-1592	A-A-59486-1IB130505O3S	13	5-5-3	Brass	Std	Std	MK	2	2	Y	Solid	95G
5340-01-588-1596	A-A-59486-1IB301510O5S	30	15-10-5	Brass	Std	Std	MK	2	2	Y	Solid	95G
5340-01-588-1641	A-A-59486-1IB5020O10S	50	20-20-10	Brass	Std	Std	MK	2	2	Y	Solid	95G
5340-01-588-1646	A-A-59486-2IB55351O10LS	55	35-10-10L	Brass	Larger	Long	MK	2	2	Y	Solid	150GL
5340-01-588-1652	A-A-59486-1IB301510L05S	30	15-10L-5	Brass	Std	Long	MK	2	2	Y	Solid	95G
5340-01-588-1657	A-A-59486-1IB4020L1505S	40	20L-15-5	Brass	Std	Long	MK	2	2	Y	Solid	95G
5340-01-588-1664	A-A-59486-2IB804520L15S	80	45-20L-15	Brass	Larger	Long	MK	2	2	Y	Solid	150GL
5340-01-588-1687	A-A-59486-2IB803030O20S	80	30-30-20	Brass	Larger	Std	MK	2	2	Y	Solid	150GL
5340-01-380-9432		1		Brass	Larger	Std	KD	2		N	Solid	RD656
5340-01-380-9430		1		Brass	Std	Std	KD	2		N	Solid	RD655
5340-01-449-6575		10		Brass	Std	Std	KA	2		N	Solid	RD655
5340-01-497-2305		16		Brass	Std	Std	KA	2		N	Solid	RD655
5340-01-449-6583		10		Brass	Larger	Std	KA	2		N	Solid	RD656
5340-01-449-6585		20		Brass	Larger	Std	KA	2		N	Solid	RD656

Option Group 1

		1A	1B	1C	1D
Hardened Stainless Steel Shackles	1-3/16"	•	•	•	•
	2-1/2"	•	•	•	•
316 Stainless Steel Shackles	1-3/16"	•	•	•	•
	2"	•	•	•	•
	3"	•	•	•	•
Hardened Steel Shackles	3/4"	•	•	•	•
	1-3/16"	•	•	•	•
	1-1/2"	•	•	•	•
	2"	•	•	•	•
	3"	•	•	•	•
	5”	•	•	•	•
Brass	1-3/16”	•	•	•	•
	3"	•	•	•	•
Cylinder Options	KZ	•	•	•	
	KD	•	•	•	
	KA	•	•	•	
	MKD	•	•	•	
	MKA	•	•	•	
	GMKD	•	•	•	
	GMKA	•	•	•	
	4-Pin Cylinder	•			
	5-Pin Cylinder	•			
	6-Pin Cylinder	•	•		
	7-Pin Cylinder			•	
	w/o Cylinder	•	•	•	
Keyways	P0	•	•		
	PR1	•		•	
	PR2	•		•	
	M1	•			
	AR1/AR2/AR3...	Call for Availability			
Your Logo, Your Locks™	Laser Engraving	•	•	•	•
	Hard Die Stamping	•	•	•	•
	Retail Packaging	•	•	•	•
Cylinder Retention	KR	•	•	•	
	NKR	•	•		
Additional Options	9" Long Shackle Chain	•	•	•	•
	Powder Coated	•	•	•	•

Option Group 2

		2A	2B	2C
Hardened Stainless Steel Shackles	1-3/16"	•	•	•
	2-1/2"	•	•	•
	5"	•	•	•
316 Stainless Steel Shackles	1-3/16"	•	•	•
	2"	•	•	•
	3"	•	•	•
Hardened Steel Shackles	1-3/16"	•	•	•
	2"	•	•	•
	3"	•	•	•
Cylinder Options	KZ	•	•	
	KD	•	•	
	KA	•	•	
	MKD	•	•	
	MKA	•	•	
	GMKD	•	•	
	GMKA	•	•	
	4-Pin Cylinder		•	
	5-Pin Cylinder		•	
	6-Pin Cylinder	•	•	
	w/o Cylinder	•	•	
Keyways	P0	•	•	
	PR1		•	
	PR2		•	
	M1		•	
	AR1/AR2/AR7	Call for Availability		
Your Logo, Your Locks™	Laser Engraving	•	•	•
	Hard Die Stamping	•	•	•
	Retail Packaging	•	•	•
Cylinder Retention	KR	•	•	
	NKR	•	•	
Additional Options	9" Long Chain	•	•	•
	Powder Coated	Call for Availability		

Option Group 3

		3A	3B	3C	3D	3E	3F
Hardened Stainless Steel Shackles	1"	•	•	•	•	•	•
	1-3/16"	•	•	•			
	2-1/2"	•	•	•			
316 Stainless Steel Shackles	1-3/16"	•	•	•			
	2"	•	•	•			
	3"	•	•	•			
Hardened Steel Shackles	1"	•	•	•	•	•	•
	1-3/16"	•	•	•			
	2"	•	•	•			
	3"	•	•	•			
Cylinder Options	KZ	•	•		•	•	
	KD	•	•		•	•	
	KA	•	•		•	•	
	MKD	•	•		•	•	
	MKA	•	•		•	•	
	GMKD	•	•		•	•	
	GMKA	•	•		•	•	
	4-Pin Cylinder		•			•	
	5-Pin Cylinder		•			•	
	6-Pin Cylinder	•	•		•	•	
	w/o Cylinder	•	•		•	•	
Keyways	P0	•	•		•	•	
	PR1		•			•	
	PR2		•			•	
	M1		•			•	
	AR1/AR2/AR7	Call for Availability					
Your Logo, Your Locks™	Laser Engraving	•	•	•	•	•	•
	Hard Die Stamping	•	•	•	•	•	•
	Retail Packaging	•	•	•	•	•	•
Cylinder Retention	KR	•	•		•	•	
	NKR	•	•		•	•	
Additional Options	Powder Coated	Call for Availability					

Option Group 4

		4A	4B	4C
Hardened Stainless Steel Shackles	1-3/16"	•	•	•
	2-1/2"	•	•	•
Cylinder Options	KZ	•	•	
	KD	•	•	
	KA	•	•	
	MKD	•	•	
	MKA	•	•	
	GMKD	•	•	
	GMKA	•	•	
	4-Pin Cylinder		•	
	5-Pin Cylinder		•	
	6-Pin Cylinder	•	•	
	w/o Cylinder	•	•	
Keyways	P0	•	•	
	PR1		•	
	PR2		•	
	M1		•	
	AR1/AR2/AR7	Call for Availability		
Your Logo, Your Locks™	Laser Engraving	•	•	•
	Hard Die Stamping	•	•	•
	Retail Packaging	•	•	•
Cylinder Retention	KR	•	•	
	NKR	•	•	
Additional Options	Powder Coated	Call for Availability		

Option Group 5

		5A	5B	5C	5D	5E	5F
Cylinder Options	KZ	•	•	•	•	•	
	KD	•	•	•	•	•	
	KA	•	•	•	•	•	
	MKD	•	•	•	•	•	
	MKA	•	•	•	•	•	
	GMKD	•	•	•	•	•	
	GMKA	•	•	•	•	•	
	4-Pin Cylinder		•	•			
	5-Pin Cylinder		•	•			
	6-Pin Cylinder	•	•	•	•		
	w/o Cylinder	•	•	•	•	•	
Keyways	P0	•	•	•	•		
	PR1		•	•		•	
	PR2		•	•		•	
	M1		•	•			
	AR1/AR2/AR7	Call for Availability					
Your Logo, Your Locks™	Laser Engraving	•	•	•	•	•	•
	Hard Die Stamping	•	•	•	•	•	•
	Retail Packaging	•	•	•	•	•	•
Additional Options	Powder Coated	Call for Availability					

Terms & Conditions

It's easy being a PACLOCK customer. We have one simple guiding principle:

"PACLOCK wants to do good business with good customers."

When we get asked what we mean by "good business with good customers," here are some of the answers that we offer:

Depend on Us: Our company is constantly finding ways to cut down our lead times by increasing our ability to push product out the door. We generally ship all orders, even highly custom orders, within 3 to 5 business days.

Minimum Orders: We are happy to ship small orders ~ so long as you are willing to pay small invoices.

Express Order Fulfillment: Orders for any product can be put at the front of our production line. We charge an additional 15% of the total order to process and ship within your requested amount of time (minimum charge of $15). We'll work with you to give you an anticipated lead time for this custom service.

Pay on Time: We are proud to be one of the last family owned lock manufacturers in the world and we depend on your timely payments to help us grow our business. Customers who consistently pay late won't be our customers for long.

Free Shipping: We will pay freight charges on all orders over $750.00 (based on net prices) to a single destination within the continental United States and Canada.

Domestic Shipping: We ship via FedEx for our orders. We are willing to ship via UPS, USPS, DHL, or other carriers but will add a service charge or use your account to ship. Please call for details.

International Shipments: Please call and talk to us about shipping internationally. We have arrangements set up with forwarders but are willing to work with your forwarders as well.

Changing or Canceling an Order: Either of these situations drains value from a company. We will be as flexible as possible, but we will likely expect some value from you in return to accommodate your request.

Warranty & Returns: PACLOCK warrants our products against any manufacturing defect for the life of the product. If it is our mistake, then we will do what it takes to make it right.

The Fine Print:
Pacific Lock Company extends a limited lifetime warranty to the original user of the products against defects in material and workmanship. Upon return of the defective product to the Company accompanied by the statement of defects the Company will repair or replace the product at the discretion of the Company. This warranty is not transferable. The following costs, expenses and damages are not covered by the provisions of this limited warranty: (i) labor costs including, but not limited to, such costs for the removal and reinstallation of Products; (ii) shipping and freight expenses required to return the products to the Company or (iii) any other incidental, consequential, indirect, special and/or punitive damages, whether based on contract, warranty, tort (including, but not limited to strict liability or negligence), patent infringement, or otherwise, even if advised of the possibility of such damages. Some states do not allow the exclusion or limitation of incidental or consequential damages, so the above exclusion or limitation may not apply to you. Pacific Lock Company does not authorize any person to create for it any obligation or liability in connection with the Products. Pacific Lock Company's maximum liability under this warranty is limited to the purchase price of the product. This warranty gives you specific legal rights, and you may also have other rights, which vary from state to state. For warranty and shipping instruction contact: 661-294-3707. In no event will Pacific Lock Company be liable for incidental, consequential, indirect, special, or punitive damages including, but not limited to, loss of use of the products, loss of profits, loss of revenue, interest, lost goodwill, work stoppage, impairment of other goods, loss by reason of shutdown or non-operation, increased expenses of operation, or claims of customer's customers, whether based on contract, warranty, tort (including, but not limited to, strict liability or negligence), patent infringement, or otherwise, even if advised of the possibility of such damages. These terms and conditions, together with any attachments or supplements specifically referenced in these terms and conditions, constitutes the entire agreement between Pacific Lock Company and customer and supersedes all previous communications, representation, or agreements, either oral or written, between the parties hereto with respect to the subject matter hereof. No agreement or understanding varying or expanding these terms and conditions will be binding upon either party hereto unless it is in writing and signed by a duly authorized representative hereof.

Notes

Notes

CONTACT

Address: 25605 Hercules Street, Valencia, CA 91355
Phone: 661.294.3707
Fax: 661.320.0220
Email: sales@paclock.com
Website: www.paclock.com

FOLLOW US

© 2020 Pacific Lock Company All Rights Reserved.

All other trademarks and registered trademarks are the property of their respective owners and are used for identification purposes only.

Printed in the U.S.A.

PACLOCK
THE FUTURE OF PADLOCKS™

MADE IN USA
WITH GLOBAL COMPONENTS

PACLOCK
We Hire Veterans and Employees with Disabilities
COMMITMENT